BEATSON'S
BUILDING SUPPLIES

BATHROOM COLLECTION

AUGUST 2025

Terms & Conditions

Guarantee

All product guarantees are subject to the following terms & conditions:

The product has been fitted/installed in accordance with the appropriate fitting instructions, local by-laws and general good trade practice. The guarantee will become invalid if the product has not been maintained and cared for in accordance with the instructions (including regular misuse, neglect, wilful or accidental damage). The guarantees on all products are from the date of supply unless otherwise stated. The guarantee only covers the material structure and not serviceable moving parts that perish due to wear and tear. In the event of the guarantee claim, the liability of the seller is limited to the product supplied and does not extend to consequential loss or damage arising from defective product. The guarantee applies to the original purchaser only and is not transferable. This guarantee does not affect your statutory rights and is applicable in the UK. All products (excluding Geberit)installed in a commercial environment carry a 12 month guarantee.

Inspection

All products must be inspected prior to installation and faulty or damaged goods must be reported within 24 hours of receipt of delivery. In the event that goods are delivered incorrectly or damaged, it is the responsibility of the customer to ensure sufficient time is allowed for a replacement item to be sent.

Batches

Please be aware that the following products are manufactured in batches: PVC Wall Panels, Flooring & PVC Ceiling Panels. Whilst there will be minimal shading difference there is no guarantee it will be identical. Batches are there to guarantee continuity.

Returns

Goods not used and still held as current stock can be returned to us within 28 days of purchase, provided they are in their original packaging, unopened and undamaged with a copy of the original invoice and in saleable condition. A restocking charge may be applicable. We cannot accept product returns that have been made by special order or have been reduced in price for display purpose or any special offers. No discontinued stock can be returned.

Carron baths placed to order which are not featured in the brochure are subject to a 25% re-stocking charge as per Carron Bathrooms terms and conditions.

Disclaimer

The specifications and prices contained within this brochure are for information purposes only and, as our products are continually updated, are subject to change without prior notice. We cannot be held responsible for the use of incorrect dimensions shown for the first fix without the actual products on site. All images shown are representative and are for illustrative purposes only. On occasions the manufacturer may make minor changes to the design of a product, due to this the item/items you may receive may have slight differences to the picture displayed in the brochure.

Pricing

All prices shown are RRP (including VAT).

Brochure Icons

To help you choose the right products for your project, we've included some helpful icons that highlight key features in each range or product.

Contents

Furniture 6
- Benke 8
- Zaneti 26
- Sonas 62
- Mirrors & Cabinets 100

Sanitaryware 116
- Pans & Basins 118
- Concealed Cisterns 134
- Geberit 137
- Countertop Basins 162

Bathing 166
- Freestanding Baths 168
- Cast Marble & Solid Surface Baths 176
- Contemporary Baths 182
- Carron Baths 184
- Bath Shower Screens 190

Showering 192
- Shower Trays 194
- Doors & Enclosures 200
- Showers & Kits 218
- TED Digital Valves 236

Brassware 240
- Mixers & Fillers 242
- Accessories 260

Heating 264
- Towel Rails 266
- Radiators 272
- Ladder Rails 276
- Valves 282

Ceiling, Floors & Walls 284
- Flooring 286
- Ceiling Panels 290
- Wall Panels 291
- Trims 312
- Niches 314

Technical Data 316

FURNITURE

Decade

600mm Wall Mounted 1 Drawer Unit
BTW Unit
Cashmere

Matt Alpine White | Cashmere | Matt Dust Grey | Matt Anthracite | Nebraska Oak

BENKÉ

BENKÉ

Wall Mounted 1 Drawer Unit with Ceramic Basin

	500mm	600mm
	W505 x H330 x D390mm	W605 x H330 x D390mm
MATT ALPINE WHITE	*DEC50WHMAW-KIN50BAS*	*DEC60WHMAW-KIN60BAS*
MATT DUST GREY	*DEC50WHMDG-KIN50BAS*	*DEC60WHMDG-KIN60BAS*
MATT ANTHRACITE	*DEC50WHMAG-KIN50BAS*	*DEC60WHMAG-KIN60BAS*
NEBRASKA OAK	*DEC50WHNNO-KIN50BAS*	*DEC60WHNNO-KIN60BAS*
CASHMERE	*DEC50WHMCA-KIN50BAS*	*DEC60WHMCA-KIN60BAS*
	£562.00	**£582.00**

Floor Standing 2 Door Unit with Ceramic Basin

	500mm	600mm
	W505 x H860 X D390mm	W605 x H860 x D390mm
MATT ALPINE WHITE	*DEC50FSMAW-KIN50BAS*	*DEC60FSMAW-KIN60BAS*
MATT DUST GREY	*DEC50FSMDG-KIN50BAS*	*DEC60FSMDG-KIN60BAS*
MATT ANTHRACITE	*DEC50FSMAG-KIN50BAS*	*DEC60FSMAG-KIN60BAS*
NEBRASKA OAK	*DEC50FSNNO-KIN50BAS*	*DEC60FSNNO-KIN60BAS*
CASHMERE	*DEC50FSMCA-KIN50BAS*	*DEC60FSMCA-KIN60BAS*
	£479.00	**£519.00**

400mm Floor Standing 1 Door Cloakroom Unit with Ceramic Basin

	W400 x H810 x D220mm
MATT ALPINE WHITE	*DEC40MAW-29038*
MATT DUST GREY	*DEC40MDG-29038*
MATT ANTHRACITE	*DEC40MAG-29038*
NEBRASKA OAK	*DEC40NNO-29038*
CASHMERE	*DEC40MCA-29038*
	£323.00

Reversible Basin

BTW Unit

	W500 x H810 x D235mm
MATT ALPINE WHITE	*DECWCMAW*
MATT DUST GREY	*DECWCMDG*
MATT ANTHRACITE	*DECWCMAG*
NEBRASKA OAK	*DECWCNNO*
CASHMERE	*DECWCMCA*
	£259.00

Concealed Cistern Required

SEE PAGE 134

BENKÉ

1 Door Column Unit
Matt Alpine White

Handles Sold Separately

SEE PAGE 60

600mm
Wall Mounted Unit
Matt Dust Grey

BENKÉ

1010mm Combination Unit
Left Hand Basin
Matt Anthracite

BENKÉ

Handles Sold Separately
SEE PAGE 60

1 Door Column Unit

	W300 x H1435 x D235mm
MATT ALPINE WHITE	*DECTBMAW*
MATT DUST GREY	*DECTBMDG*
MATT ANTHRACITE	*DECTBMAG*
NEBRASKA OAK	*DECTBNNO*
CASHMERE	*DECTBMCA*
	£353.00

1100mm Combination Unit with L Shape Polymarble Basin

	W1100 x H855 x D260/460mm	
	With L/H Basin (Shown)	With R/H Basin
MATT ALPINE WHITE	*DEC11LAWLH*	*DEC11LAWRH*
MATT DUST GREY	*DEC11LDGLH*	*DEC11LDGRH*
MATT ANTHRACITE	*DEC11LMALH*	*DEC11LMARH*
NEBRASKA OAK	*DEC11LNOLH*	*DEC11LNORH*
CASHMERE	*DEC11LCALH*	*DEC11LCARH*
	£831.00	**£831.00**

1010mm Combination Unit with P Shape Polymarble Basin

	W1010 x H850 x D260/365mm	
	With L/H Basin	With R/H Basin (Shown)
MATT ALPINE WHITE	*DEC10CAWLH*	*DEC10CAWRH*
MATT DUST GREY	*DEC10CDGLH*	*DEC10CDGRH*
MATT ANTHRACITE	*DEC10CMALH*	*DEC10CMARH*
NEBRASKA OAK	*DEC10CNOLH*	*DEC10CNORH*
CASHMERE	*DEC10CCALH*	*DEC10CCARH*
	£879.00	**£879.00**

BENKÉ

Nevis

Worktops

	500mm W510 x H22 x D390mm	600mm W610 x H22 x D390mm
MATT ALPINE WHITE	*DECCT50MAW*	*DECCT60MAW*
MATT DUST GREY	*DECCT50MDG*	*DECCT60MDG*
MATT ANTHRACITE	*DECCT50MAN*	*DECCT60MAN*
NEBRASKA OAK	*DECCT50NNO*	*DECCT60NNO*
CASHMERE	*DECCT50MCA*	*DECCT60MCA*
	£109.00	**£119.00**

L-Shaped Worktops

	1100mm L/H (shown) W1100 x H22 x D252/460mm	1100mm R/H W1100 x H22 x D252/460mm
MATT ALPINE WHITE	*DECCT11AWLH*	*DECCT11AWRH*
MATT DUST GREY	*DECCT11DGLH*	*DECCT11DGRH*
MATT ANTHRACITE	*DECCT11MALH*	*DECCT11MARH*
NEBRASKA OAK	*DECCT11NOLH*	*DECCT11NORH*
CASHMERE	*DECCT11CALH*	*DECCT11CARH*
	£140.00	**£140.00**

Combination P-Shaped Basin Overflow Options

MATT BLACK	*FUSOVBL*	**£20.00**
BRUSHED BRASS	*FUSOVBB*	**£20.00**

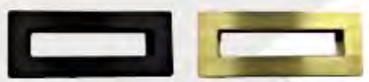

Recommended Handle Options

Lip Handle

	150mm	300mm
CHROME	*DEC150CH*	*DEC300CH*
MATT BLACK	*DEC150MB*	*DEC300MB*
BRUSHED BRASS	*DEC150BB*	*DEC300BB*
	£28.00	**£31.00**

Bar Handle

	160mm Centres	320mm Centres
CHROME	*DEC160CH*	*DEC320CH*
MATT BLACK	*DEC160MB*	*DEC320MB*
BRUSHED BRASS	*DEC160BB*	*DEC320BB*
	£16.00	**£26.00**

*Handles sold separately. 1 x handle required for Wall Mounted Vanity & Column Units. 2 x handles required for Floor Standing Vanity Units and Combination Units. Choose from above selection to match your brassware **OR** choose from the Handle Range on pages 60–61.

500mm Floorstanding 2 Drawer Unit
2 Door Column Unit
BTW Unit
Cashmere

Gloss White | Matt Anthracite | Matt Black | Cashmere

BENKÉ

Wall Mounted 2 Drawer Unit with Ceramic Basin

	500mm W500 x H600 x D460mm	600mm W600 x H600 x D460mm
GLOSS WHITE	*NEV50WMGW-NEV546BAS*	*NEV60WMGW-NEV60BAS*
MATT ANTHRACITE	*NEV50WMAN-NEV546BAS*	*NEV60WMAN-NEV60BAS*
MATT BLACK	*NEV50WMBL-NEV546BAS*	*NEV60WMBL-NEV60BAS*
CASHMERE	*NEV50WMCA-NEV546BAS*	*NEV60WMCA-NEV60BAS*
	£615.00	**£650.00**

Floor Standing 2 Drawer Unit with Ceramic Basin

	500mm W500 x H840 x D460mm	600mm W600 x H840 x D460mm
GLOSS WHITE	*NEV50FSDRGW-NEV546BAS*	*NEV60FSDRGW-NEV60BAS*
MATT ANTHRACITE	*NEV50FSDRAN-NEV546BAS*	*NEV60FSDRAN-NEV60BAS*
MATT BLACK	*NEV50FSDRBL-NEV546BAS*	*NEV60FSDRBL-NEV60BAS*
CASHMERE	*NEV50FSDRCA-NEV546BAS*	*NEV60FSDRCA-NEV60BAS*
	£638.00	**£710.00**

500mm Floor Standing 2 Door Unit with Ceramic Basin

	W490 x H840 x D280mm
GLOSS WHITE	*NEV50FSGW-NEV528BAS*
MATT ANTHRACITE	*NEV50FSAN-NEV528BAS*
MATT BLACK	*NEV50FSBL-NEV528BAS*
CASHMERE	*NEV50FSCA-NEV528BAS*
	£454.00

Unslotted Waste Required

Right Hand Tap Hole Only

BTW Unit

	W500 x H765 x D265mm
GLOSS WHITE	*NEV50WCGW*
MATT ANTHRACITE	*NEV50WCAN*
MATT BLACK	*NEV50WCBL*
CASHMERE	*NEV50WCCA*
	£254.00

Concealed Cistern Required

SEE PAGE 136

BENKÉ

2 Door Column Unit

	W350 x H1400 x D330mm
GLOSS WHITE	*NEV14TUGW*
MATT ANTHRACITE	*NEV14TUAN*
MATT BLACK	*NEV14TUBL*
CASHMERE	*NEV14TUCA*
	£452.00

600mm Wall Mounted 2 Drawer Unit
2 Door Column Unit
BTW Unit
Matt Anthracite

BENKÉ

Lewis

600mm Floorstanding
2 Drawer Unit
2 Door Column Unit
White Gloss

550mm 2 Door Floorstanding Vanity Unit
Square Basin
BTW Unit
Gloss White

White Gloss

BENKÉ

Purity

Handles Sold Separately
SEE PAGE 60

2 Door Vanity Unit with Round Ceramic Basin

	550mm	650mm
	W550 x H836 x D300mm	W650 x H836 x D300mm
GLOSS WHITE	*LEW55VU-LEW55BAS*	*LEW65VU-LEW65BAS*
	£318.00	£399.00

Choice of Round or Square Ceramic Basin

2 Door Vanity Unit with Square Ceramic Basin

	550mm	650mm
	W550 x H836 x D300mm	W650 x H836 x D300mm
GLOSS WHITE	*LEW55VU-LEW55SQBAS*	*LEW65VU-LEW65SQBAS*
	£352.00	£414.00

BTW Unit

	500mm	600mm
	W500 x H766 x D300mm	W600 x H766 x D300mm
GLOSS WHITE	*LEW50WC*	*LEW60WC*
	£232.00	£274.00

Recommended Handle Options

Lewis Vanity Unit supplied with chrome D shape handles as standard.
Optional Matt Black Bar, Lip or Surf handles also available (2 required).
Or choose from our extensive range of handle options. See pages 60-61.

Lip Handle

	150mm	300mm
MATT BLACK	*DEC150MB*	*DEC300MB*
	£28.00	£31.00

Surf Handle

	150mm
MATT BLACK	*29413*
	£27.00

Bar Handle

	160mm Centres
MATT BLACK	*DEC160MB*
	£16.00

600mm 2 Door Floorstanding Unit
1 Door Column Unit
BTW Unit
Silver Oak

White Gloss | Storm Grey Gloss | Matt Black | Silver Oak

NEW

500mm Floor Standing 2 Door Unit with Ceramic Basin

		W500 x H855 x D390mm
GLOSS WHITE	*FUR125PU-FUR063PU*	**£423.00**
SILVER OAK	*PSO500DO-FUR063PU*	**£423.00**
MATT BLACK	*PMB500DO-FUR063PU*	**£443.00**
STORM GREY GLOSS	*FUR127PU-FUR063PU*	**£443.00**

Pre-Drilled for Handles

NEW

600mm Floor Standing 2 Door Unit with Ceramic Basin

		W600 x H855 x D450mm
GLOSS WHITE	*FUR001PU-FUR057PU*	**£439.00**
SILVER OAK	*PSO600DO-FUR057PU*	**£439.00**
MATT BLACK	*PMB600DO-FUR057PU*	**£459.00**
STORM GREY GLOSS	*FUR003PU-FUR057PU*	**£459.00**

Pre-Drilled for Handles

NEW

600mm Floor Standing 2 Drawer Unit with Ceramic Basin

		W600 x H855 x D450mm
GLOSS WHITE	*FUR008PU-FUR057PU*	**£601.00**
SILVER OAK	*PSO600DR-FUR057PU*	**£601.00**
MATT BLACK	*PMB600DR-FUR057PU*	**£648.00**
STORM GREY GLOSS	*FUR012PU-FUR057PU*	**£648.00**

Pre-Drilled for Handles

600mm 2 Door Wall Mounted Unit
1 Door Column Unit
BTW Unit
Gloss White

600mm Wall Mounted 2 Drawer Unit with Ceramic Basin

		W600 x H500 x D450mm
GLOSS WHITE	FUR022PU-FUR057PU	£568.00
SILVER OAK	PSO600WM-FUR057PU	£568.00
MATT BLACK	PMB600WM-FUR057PU	£601.00
STORM GREY GLOSS	FUR026PU-FUR057PU	£601.00

Pre-Drilled for Handles

BTW Unit

		W505 x H830 x D250mm
GLOSS WHITE	FUR082PU	£236.00
SILVER OAK	PSO505WC	£236.00
MATT BLACK	PMB505WC	£253.00
STORM GREY GLOSS	FUR086PU	£253.00

Concealed Cistern Required

SEE PAGE 136

1 Door Column Unit

		W355 x H1400 x D250mm
GLOSS WHITE	FUR090PU	£277.00
SILVER OAK	PSO1400SU	£277.00
MATT BLACK	PMB1400SU	£328.00
STORM GREY GLOSS	FUR094PU	£328.00

Pre-Drilled for Handles

800mm Handle

CHROME	HAN006	£38.00
MATT BLACK	HAN007	£38.00

Handles for Column Unit

1100mm 2 Drawer Combination Unit with L Shaped Basin (Left Hand)

		W1100 x H830 x D450/250mm
GLOSS WHITE	FUR008PU-FUR402MA-FUR430NEW	£972.00
SILVER OAK	PSO600DR-PSO505MA-FUR430NEW	£972.00
MATT BLACK	PMB600DR-PMB505MA-FUR430NEW	£1052.00
STORM GREY GLOSS	FUR012PU-FUR411MA-FUR430NEW	£1052.00

Left Hand Shown

Pre-Drilled for Handles

1100mm 2 Drawer Combination Unit with L Shaped Basin (Right Hand)

		W1100 x H830 x D450/250mm
GLOSS WHITE	FUR008PU-FUR402MA-FUR431NEW	£972.00
SILVER OAK	PSO600DR-PSO505MA-FUR431NEW	£972.00
MATT BLACK	PMB600DR-PMB505MA-FUR431NEW	£1052.00
STORM GREY GLOSS	FUR012PU-FUR411MA-FUR431NEW	£1052.00

1100mm 2 Door Combination Unit with L Shaped Basin (Left Hand)

		W1100 x H830 x D450/250mm
GLOSS WHITE	FUR001PU-FUR402MA-FUR430NEW	£810.00
SILVER OAK	PSO600DO-PSO505MA-FUR430NEW	£810.00
MATT BLACK	PMB600DO-PMB505MA-FUR430NEW	£863.00
STORM GREY GLOSS	FUR003PU-FUR411MA-FUR430NEW	£863.00

Right Hand Shown

Pre-Drilled for Handles

1100mm 2 Door Combination Unit with L Shaped Basin (Right Hand)

		W1100 x H830 x D450/250mm
GLOSS WHITE	FUR001PU-FUR402MA-FUR431NEW	£810.00
SILVER OAK	PSO600DO-PSO505MA-FUR431NEW	£810.00
MATT BLACK	PMB600DO-PMB505MA-FUR431NEW	£863.00
STORM GREY GLOSS	FUR003PU-FUR411MA-FUR431NEW	£863.00

500mm Handle

	500mm		500mm		500mm
CHROME	HAN004	MATT BLACK	HAN005	BRUSHED BRASS	HAN015
	£32.00		£32.00		£47.00

Handles for Drawer & Door Units

Dakota

800mm Wall Mounted 1 Drawer Unit
with Hidden Drawer
2 Door Column Unit
Walnut

Walnut | Cashmere | Olive | Khaki | Espresso

ZANETI®

600mm Wall Mounted 1 Drawer Unit with Hidden Drawer & Ceramic Basin

W605 x H535 x D455mm

WALNUT	29917-29016	£988.00
CASHMERE	29841-29016	£922.00
OLIVE	29840-29016	£922.00
KHAKI	29843-29016	£922.00
ESPRESSO	29842-29016	£922.00

800mm Wall Mounted 1 Drawer Unit with Hidden Drawer & Ceramic Basin

W810 x H535 x D460mm

WALNUT	29918-29017	£1176.00
CASHMERE	29845-29017	£1145.00
OLIVE	29844-29017	£1145.00
KHAKI	29847-29017	£1145.00
ESPRESSO	29846-29017	£1145.00

Handles Sold Separately

SEE PAGE 60

BTW Unit

W502 x H838 x D230mm

WALNUT	29916	£243.00
CASHMERE	29895	£211.00
OLIVE	29894	£211.00
KHAKI	29897	£211.00
ESPRESSO	29896	£211.00

2 Door Column Unit

W337 x H1500 x D300mm

WALNUT	29909	£456.00
CASHMERE	29849	£411.00
OLIVE	29848	£411.00
KHAKI	29893	£411.00
ESPRESSO	29892	£411.00

800mm Wall Mounted 2 Drawer Unit
2 Door Column Unit
Khaki

Kolour

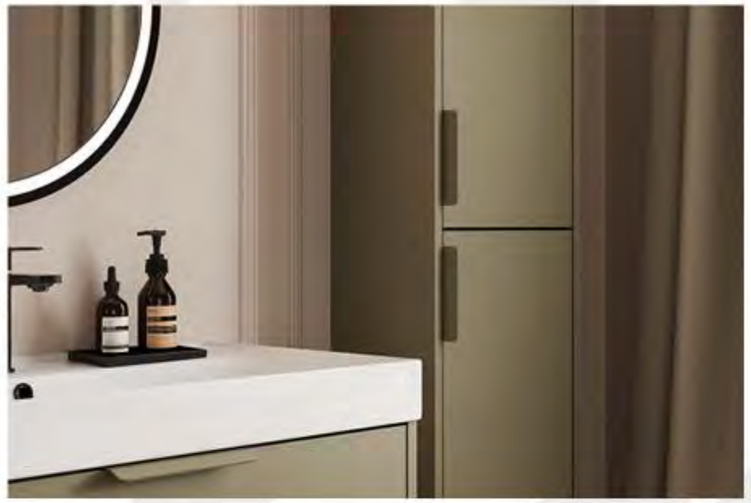

2 Door Column Unit
Olive Green

800mm Wall Mounted 1 Drawer Unit
with Hidden Drawer
Espresso

600mm Wall Mounted
2 Drawer Unit
2 Door Column Unit
Tuscan Red

Ocean Blue | Soft Black | Fjord Green | Tuscan Red | Cashmere | Matt White

Wall Mounted 2 Drawer Unit with Ceramic Basin

	500mm	600mm
	W505 x H565 x D390mm	W610 x H565 x D460mm
OCEAN BLUE	*29201-29036*	*29206-29073*
SOFT BLACK	*29202-29036*	*29207-29073*
FJORD GREEN	*29203-29036*	*29208-29073*
TUSCAN RED	*29581-29036*	*29582-29073*
CASHMERE	*29179-29036*	*29180-29073*
MATT WHITE	*29200-29036*	*29205-29073*
	£770.00	**£827.00**

* Short projection 500 unit only

Handles Sold Separately
SEE PAGE 60

600mm Floor Standing 2 Door Unit with Ceramic Basin

	W610 x H840 x D460mm
OCEAN BLUE	*29169-29073*
SOFT BLACK	*29168-29073*
FJORD GREEN	*29170-29073*
TUSCAN RED	*29587-29073*
CASHMERE	*29183-29073*
MATT WHITE	*29167-29073*
	£681.00

Handles Sold Separately
SEE PAGE 60

400mm Floor Standing 1 Door Cloakroom with Ceramic Basin

	W400 x H840 x D220mm
OCEAN BLUE	*29226-29038*
SOFT BLACK	*29227-29038*
FJORD GREEN	*29228-29038*
TUSCAN RED	*29586-29038*
CASHMERE	*29182-29038*
MATT WHITE	*29225-29038*
	£376.00

Push-to-Open.
No handles required

BTW Unit

	W500 x H840 x D220mm
OCEAN BLUE	*29216*
SOFT BLACK	*29217*
FJORD GREEN	*29218*
TUSCAN RED	*29584*
CASHMERE	*29504*
MATT WHITE	*29215*
	£314.00

Concealed Cistern Required
SEE PAGE 136

Push-to-Open.
No handles required

2 Door Column Unit

	W297 x H1500 x D233mm
OCEAN BLUE	*29221*
SOFT BLACK	*29222*
FJORD GREEN	*29223*
TUSCAN RED	*29585*
CASHMERE	*29184*
MATT WHITE	*29220*
	£471.00

500mm Wall Mounted 2 Drawer Unit (x2)
Tuscan Red

Amor

600mm Wall Mounted 2 Drawer Unit
Fjord Green

800mm Wall Mounted 2 Drawer Unit
BTW Unit
Fjord Green

800mm Wall Mounted 2 Drawer Unit
Walnut

White Cashmere Walnut

400mm Wall Mounted 1 Door Unit with Ceramic Basin

		W400 x H575 x D220mm
WHITE	*29828-29827*	**£372.00**
CASHMERE	*29829-29827*	**£372.00**
WALNUT	*29830-29827*	**£386.00**

600mm Wall Mounted 2 Drawer Unit with Ceramic Basin

		W605 x H605 x D455mm
WHITE	*29816-29016*	**£848.00**
CASHMERE	*29817-29016*	**£848.00**
WALNUT	*29818-29016*	**£879.00**

800mm Wall Mounted 2 Drawer Unit with Ceramic Basin

		W810 x H605 x D460mm
WHITE	*29819-29017*	**£1037.00**
CASHMERE	*29820-29017*	**£1037.00**
WALNUT	*29821-29017*	**£1069.00**

600mm Floor Standing 3 Drawer Unit with Ceramic Basin

		W605 x H925 x D455mm
WHITE	*29822-29016*	**£963.00**
CASHMERE	*29823-29016*	**£963.00**
WALNUT	*29824-29016*	**£1000.00**

600mm Wall Mounted 2 Drawer Unit
White

Fluted Drawer Front

600mm Floorstanding 3 Drawer Unit
Cashmere

Cotswold

Push-to-Open:
No Handles Required

BTW Unit

		W500 x H840 x D230mm
WHITE	29215	£314.00
CASHMERE	29504	£314.00
WALNUT	29761	£330.00

1 Door Column Unit

		W400 x H1200 x D300mm
WHITE	29831	£523.00
CASHMERE	29832	£523.00
WALNUT	29833	£549.00

800mm Wall Mounted 2 Drawer Unit
Walnut

600mm Floor Standing 2 Drawer Unit
2 Door Column Unit
Henley Blue

Satin White | Cashmere | Boston Green Matt | Henley Blue | Sandy Oak

NEW

600mm Wall Mounted 1 Drawer Unit with Hidden Drawer & Ceramic Basin

W605 x H535 x D455mm

SATIN WHITE	29955-29016	£950.00
CASHMERE	29958-29016	£950.00
BOSTON GREEN	29957-29016	£950.00
HENLEY BLUE	29956-29016	£950.00
SANDY OAK	29959-29016	£995.00

Handles Sold Separately

SEE PAGE 60

800mm Wall Mounted 1 Drawer Unit with Hidden Drawer & Ceramic Basin

W805 x H535 x D460mm

SATIN WHITE	29960-29017	£1182.00
CASHMERE	29963-29017	£1182.00
BOSTON GREEN	29962-29017	£1182.00
HENLEY BLUE	29961-29017	£1182.00
SANDY OAK	29964-29017	£1226.00

Handles Sold Separately

SEE PAGE 60

NEW

600mm Floor Standing 2 Drawer Unit with Ceramic Basin

W605 x H910 x D455mm

SATIN WHITE	29950-29016	£1115.00
CASHMERE	29953-29016	£1115.00
BOSTON GREEN	29952-29016	£1115.00
HENLEY BLUE	29951-29016	£1115.00
SANDY OAK	29954-29016	£1129.00

Handles Sold Separately

SEE PAGE 60

NEW

600mm Floor Standing 2 Door Unit with Ceramic Basin

W605 x H910 x D455mm

SATIN WHITE	29945-29016	£855.00
CASHMERE	29948-29016	£855.00
BOSTON GREEN	29947-29016	£855.00
HENLEY BLUE	29946-29016	£855.00
SANDY OAK	29949-29016	£886.00

Handles Sold Separately

SEE PAGE 60

800mm Floorstanding 1 Drawer Unit
with Hidden Drawer
2 Door Column Unit
Sandy Oak

Handles Sold Separately
SEE PAGE 60

BTW Unit

W502 x H840 x D230mm

SATIN WHITE	29940	£499.00
CASHMERE	29943	£499.00
BOSTON GREEN	29942	£499.00
HENLEY BLUE	29941	£499.00
SANDY OAK	29944	£525.00

400mm Floorstanding 1 Door Cloakroom Unit

W400 x H875 x D222mm

SATIN WHITE	29935	£375.00
CASHMERE	29938	£375.00
BOSTON GREEN	29937	£375.00
HENLEY BLUE	29936	£375.00
SANDY OAK	29939	£399.00

2 Door Column Unit

W337 x H1500 x D300mm

SATIN WHITE	29930	£749.00
CASHMERE	29933	£749.00
BOSTON GREEN	29932	£749.00
HENLEY BLUE	29931	£749.00
SANDY OAK	29934	£785.00

800mm Wall Mounted 1 Drawer Unit
with Hidden Drawer
2 Door Column Unit
Boston Green

Concept

800mm Wall Mounted 2 Drawer Unit
Satin Cashmere

Satin White | Satin Cashmere | Satin Sage

600mm Wall Mounted 2 Drawer Unit with Ceramic Basin

	W605 x H565 x D460mm
SATIN WHITE	*29850-29073*
SATIN CASHMERE	*29852-29073*
SATIN SAGE	*29851-29073*
	£827.00

800mm Wall Mounted 2 Drawer Unit with Ceramic Basin

	W810 x H565 x D460mm
SATIN WHITE	*29853-29074*
SATIN CASHMERE	*29855-29074*
SATIN SAGE	*29854-29074*
	£949.00

BTW Unit

	W500 x H840 x D220mm
SATIN WHITE	*29215*
SATIN CASHMERE	*29504*
SATIN SAGE	*29505*
	£314.00

1 Door Column Unit

	W400 x H1200 x D300mm
SATIN WHITE	*29135*
SATIN CASHMERE	*29136*
SATIN SAGE	*29137*
	£555.00

800mm Wall Mounted 2 Drawer Unit
Satin Cashmere

J Pull Handles

800mm Wall Mounted 2 Drawer Unit
Satin White

Can’t find what you are looking for?

Scan the QR code to download the latest Zaneti brochure and discover more finishes and options.

Soho

800mm Wall Mounted 1 Drawer Unit
1 Door Column Unit
Henley Blue

Natural Beige | Henley Blue | Walnut | Natural Oak

Push-to-Open:
No Handles Required

Wall Mounted 1 Drawer Unit with Ceramic Basin

	500mm W500w x H500 x D380mm	600mm W610 x H500 x D410mm	800mm W810 x H500 x D485mm
NATURAL BEIGE	*29604-29739*	*29749-29750*	*29752-29751*
HENLEY BLUE	*29603-29739*	*29767-29750*	*29753-29751*
	£707.00	**£818.00**	**£933.00**
NATURAL OAK	*29794-29739*	*29768-29750*	*29754-29751*
	£712.00	**£823.00**	**£939.00**
WALNUT	*29679-29739*	*29637-29750*	*29646-29751*
	£712.00	**£836.00**	**£1012.00**

* Short projection 500 unit only

Push-to-Open:
No Handles Required

Floor Standing 2 Door Unit with Ceramic Basin

	500mm W505 x H922 x D380mm	600mm W610 x H922 x D410mm
NATURAL BEIGE	*29602-29739*	*29755-29750*
HENLEY BLUE	*29601-29739*	*29756-29750*
	£663.00	**£774.00**
NATURAL OAK	*29677-29739*	*29757-29750*
WALNUT	*29678-29739*	*29648-29750*
	£668.00	**£779.00**

* Short projection 500 unit only

NEW

Push-to-Open:
No Handles Required

Reversible Basin

400mm Floor Standing 1 Door Cloakroom with Ceramic Basin

	W405 x H850 x D220mm
NATURAL BEIGE	*29758-29038*
HENLEY BLUE	*29759-29038*
	£443.00
NATURAL OAK	*29760-29038*
WALNUT	*29650-29038*
	£447.00

500mm Wall Mounted 1 Drawer Unit
Natural Beige

Clarity

Push-to-Open:
No Handles Required

BTW Unit

		W500 x H840 x D225mm
NATURAL BEIGE	29773	£314.00
HENLEY BLUE	29762	£314.00
NATURAL OAK	29763	£330.00
WALNUT	29761	£330.00

1 Door Column Unit

		W297 x H1500 x D233mm
NATURAL BEIGE	29764	£562.00
HENLEY BLUE	29765	£562.00
NATURAL OAK	29766	£567.00
WALNUT	29644	£567.00

800mm Wall Mounted 1 Drawer Unit
1 Door Column Unit
Natural Beige

600mm Wall Mounted 1 Drawer Unit
1 Door Column Unit
Henley Blue

600mm Floorstanding 2 Door Unit
BTW Unit
Dove Grey

Satin White | Henley Blue | Boston Green | Matt Black | Dove Grey

Wall Mounted 2 Drawer Unit with Ceramic Basin

	500mm W500 x H565 x D390mm	600mm W600 x H565 x D390mm
SATIN WHITE	29552-29037	29547-29021
HENLEY BLUE	29554-29037	29549-29021
BOSTON GREEN	29555-29037	29550-29021
MATT BLACK	29556-29037	29551-29021
DOVE GREY	29553-29037	29548-29021
	£767.00	**£862.00**

Handles Sold Separately

SEE PAGE 60

600mm Floor Standing 2 Door Unit with Ceramic Basin

	W600 x H840 x D390mm
SATIN WHITE	29542-29021
HENLEY BLUE	29544-29021
BOSTON GREEN	29545-29021
MATT BLACK	29546-29021
DOVE GREY	29543-29021
	£748.00

Handles Sold Separately

SEE PAGE 60

400mm Floor Standing 1 Door Cloakroom with Ceramic Basin

	W400 x H840 x D220mm
SATIN WHITE	29572-29038
HENLEY BLUE	29574-29038
BOSTON GREEN	29575-29038
MATT BLACK	29576-29038
DOVE GREY	29573-29038
	£467.00

Handles Sold Separately

SEE PAGE 60

800mm Wall Mounted 2 Drawer Unit
Column Unit
Henley Blue

Series

Handles Sold Separately
SEE PAGE 60

BTW Unit

	500mm W500 x H820 x D205mm
SATIN WHITE	29562
HENLEY BLUE	29564
BOSTON GREEN	29565
MATT BLACK	29566
DOVE GREY	29563
	£450.00

2 Door Column Unit

	1500mm W300 x H1500 x D215mm
SATIN WHITE	29567
HENLEY BLUE	29569
BOSTON GREEN	29570
MATT BLACK	29571
DOVE GREY	29568
	£598.00

Recommended Handle Options

Traditional Cup Handle

BRUSHED CHROME 64MM	28112
	£15.00

Regent Handle

CHROME 32MM
29389
£30.00

MATT BLACK 32MM
29390
£30.00

BRUSHED BRASS 32MM
29391
£30.00

Varo Handle

	160mm Centres	320mm Centres
CHROME	29432	29429
	£20.00	**£30.00**

	160mm Centres	320mm Centres
MATT BLACK	29433	29430
	£19.00	**£26.00**

	160mm Centres	320mm Centres
BRUSHED BRASS	29434	29431
	£23.00	**£34.00**

800mm Wall Mounted 2 Drawer Unit
1 Door Column Unit
Soft Black

Gloss White | Matt Mid Grey | Soft Black | Henley Blue

No Handles Required

Wall Mounted 1 Drawer Unit with Ceramic Basin

	500mm W500 x H450 x D390mm	600mm W600 x H450 x D390mm
GLOSS WHITE	29127-29036	29104-29007
MATT MID GREY	29370-29036	29371-29007
SOFT BLACK	29101-29036	29100-29007
HENLEY BLUE	29376-29036	29375-29007
	£717.00	**£720.00**

600mm Wall Mounted 2 Drawer Unit with Ceramic Basin

	600mm W600 x H565 x D390mm
GLOSS WHITE	29004-29007
MATT MID GREY	29368-29007
SOFT BLACK	29063-29007
HENLEY BLUE	29256-29007
	£720.00

Handles Sold Separately
SEE PAGE 60

Floor Standing 2 Door Unit with Ceramic Basin

	500mm W500 x H840 x D390mm	600mm W600 x H840 x D390mm
GLOSS WHITE	29048-29036	29012-29007
MATT MID GREY	29362-29036	29363-29007
SOFT BLACK	29097-29036	29065-29007
HENLEY BLUE	29372-29036	29258-29007
	£633.00	**£657.00**

Handles Sold Separately
SEE PAGE 60

400mm Floor Standing 1 Door Cloakroom with Ceramic Basin

	400mm W405 x H850 x D222mm
GLOSS WHITE	29042-29038
MATT MID GREY	29360-29038
SOFT BLACK	29096-29038
HENLEY BLUE	29266-29038
	£424.00

Handles Sold Separately
SEE PAGE 60

800mm Floorstanding 2 Door Unit
1 Door Column Unit
BTW Unit
Gloss White

600mm Wall Mounted 1 Drawer Unit
BTW Unit
Henley Blue

BTW Unit

	W500 x H840 x D220mm
GLOSS WHITE	*29018*
MATT MID GREY	*29359*
SOFT BLACK	*29067*
HENLEY BLUE	*29762*
	£314.00

Push-to-Open:
No Handles Required

1 Door Column Unit

	W300 x H1500 x D235mm
GLOSS WHITE	*29001*
MATT MID GREY	*29361*
SOFT BLACK	*29062*
HENLEY BLUE	*29255*
	£471.00

Handles Sold Separately
SEE PAGE 60

1100mm Combination Unit with L Shaped Polymarble Basin

	W1100 x H865 x D260/360mm	
	With L/H L Shaped Basin	With R/H L Shaped Basin (Shown)
GLOSS WHITE	*29058-29053-29040*	*29058-29053-29041*
MATT MID GREY	*29366-29365-29040*	*29366-29365-29041*
SOFT BLACK	*29099-29110-29040*	*29099-29110-29041*
HENLEY BLUE	*29374-29345-29040*	*29374-29345-29041*
	£1172.00	**£1172.00**

1100mm Combination Unit with Curved Polymarble Basin

	W1100 x H865 x D260mm	
	With L/H Curved Basin	With R/H Curved Basin (Shown)
GLOSS WHITE	*29049-29053-17100*	*29049-29053-17101*
MATT MID GREY	*29367-29365-17100*	*29367-29365-17101*
SOFT BLACK	*29098-29110-17100*	*29098-29110-17101*
HENLEY BLUE	*29373-29345-17100*	*29373-29345-17101*
	£1150.00	**£1150.00**

1100mm Combination Unit
(Right Hand Shown)
L Shape Basin
Matt Mid Grey

Handles

All handles compatible with BENKÉ & ZANETI® furniture range items.

Lip Handle

Boss Handle

	192mm Centres	256mm Centres	537mm Centres
CHROME	29400	29401	29402
	£19.00	£22.00	£27.00

	192mm Centres	256mm Centres
MATT BLACK	29398	29399
	£19.00	£22.00

Knurled Bar Handle

	160mm Centres	256mm Centres
CHROME	29383	29386
	£22.00	£30.00

	160mm Centres	256mm Centres
MATT BLACK	29384	29387
	£22.00	£30.00

	160mm Centres	256mm Centres
BRUSHED BRASS	29385	29388
	£22.00	£30.00

Lip Handle

	150mm	300mm
CHROME	DEC150CH	DEC300CH
	£28.00	£31.00

	150mm	300mm
MATT BLACK	DEC150MB	DEC300MB
	£28.00	£31.00

	150mm	300mm
BRUSHED BRASS	DEC150BB	DEC300BB
	£28.00	£31.00

Hex Handle

	160mm Centres	320mm Centres
CHROME	29420	29421
	£14.00	£23.00

	160mm Centres	320mm Centres
MATT BLACK	29422	29423
	£14.00	£23.00

	160mm Centres	320mm Centres
BRUSHED BRASS	29424	29425
	£19.00	£30.00

Varo Handle

	160mm Centres	320mm Centres
CHROME	29432	29429
	£20.00	£30.00

	160mm Centres	320mm Centres
MATT BLACK	29433	29430
	£19.00	£26.00

	160mm Centres	320mm Centres
BRUSHED BRASS	29434	29431
	£23.00	£34.00

Surf Handle

	300mm	600mm	800mm
CHROME	29412	29416	29418
	£30.00	£56.00	£66.00

	300mm	600mm	800mm
MATT BLACK	29413	29417	29419
	£27.00	£44.00	£52.00

	300mm	600mm	800mm
BRUSHED BRASS	29414	29410	29411
	£35.00	£56.00	£66.00

Surf Handle

Orla Handle

	156mm
CHROME	29426
	£30.00

	156mm
MATT BLACK	29427
	£26.00

	156mm
BRUSHED BRASS	29428
	£39.00

Regent Handle

Traditional Cup Handle

CHROME 64MM	28112
MATT BLACK 64MM	28110
BRUSHED BRASS 64MM	28111
	£15.00

Regent Handle

CHROME 32MM	29389
MATT BLACK 32MM	29390
BRUSHED BRASS 32MM	29391
	£30.00

Sleek Pull Handles (200mm)

TUSCAN RED	CASHMERE	FJORD GREEN
29190	29189	29281
£25.00	£25.00	£25.00
FOREST GREEN	KHAKI	OLIVE
29289	29246	29242
£25.00	£25.00	£25.00
ESPRESSO	CHROME	MATT BLACK
29247	29788	29789
£25.00	£13.00	£13.00
	BRUSHED BRASS	BOSTON GREEN
	29790	219791
	£14.00	£25.00

Sleek Pull Handles (150mm)

TUSCAN RED	CASHMERE	FJORD GREEN
219186	29185	29187
£21.00	£21.00	£21.00
FOREST GREEN	KHAKI	OLIVE
29188	29240	29239
£21.00	£21.00	£21.00
ESPRESSO	CHROME	MATT BLACK
29241	29785	29786
£21.00	£10.00	£10.00
	BRUSHED BRASS	BOSTON GREEN
	29787	29808
	£12.00	£21.00

Arc

800mm Wall Mounted 2 Drawer Unit
Matt Morning Sky Blue

Matt White | Matt Black | Matt Cashmere Pink | Matt Morning Sky Blue | Matt Ocean Blue | Matt Night Sky Blue | Matt Arctic Grey

SONAS

600mm Wall Mounted 2 Drawer Unit with Polymarble Basin

	W600 x H580 x D460mm
MATT WHITE	*UF0359*
MATT BLACK	*UF0694*
MATT CASHMERE PINK	*UF0693*
MATT MORNING SKY BLUE	*UF0357*
MATT OCEAN BLUE	*UF0355*
MATT NIGHT SKY BLUE	*UF0356*
MATT ARCTIC GREY	*UF0358*
	£869.00

800mm Wall Mounted 2 Drawer Unit with Polymarble Basin

	W800 x H580 x D460mm
MATT WHITE	*UF0364*
MATT BLACK	*UF0696*
MATT CASHMERE PINK	*UF0695*
MATT MORNING SKY BLUE	*UF0362*
MATT OCEAN BLUE	*UF0360*
MATT NIGHT SKY BLUE	*UF0361*
MATT ARCTIC GREY	*UF0363*
	£978.00

1000mm Wall Mounted 2 Drawer Unit with Polymarble Basin

	W1000 x H580 x D460mm
MATT WHITE	*UF0369*
MATT BLACK	*UF0698*
MATT CASHMERE PINK	*UF0697*
MATT MORNING SKY BLUE	*UF0367*
MATT OCEAN BLUE	*UF0365*
MATT NIGHT SKY BLUE	*UF0366*
MATT ARCTIC GREY	*UF0368*
	£1050.00

1000mm Wall Mounted 2 Drawer Unit
Matt Night Sky Blue

SONAS

600mm Wall Mounted 2 Drawer Unit
Matt Arctic Grey

600mm Wall Mounted 2 Door Unit
Matt Morning Sky Blue

Freya

500mm Wall Mounted 2 Drawer Unit
Matt Ocean Blue

Matt White | Matt Black | Matt Cashmere Pink | Matt Morning Sky Blue | Matt Ocean Blue | Matt Night Sky Blue | Matt Arctic Grey | Matt Wreath Green

SONAS

500mm Wall Mounted 2 Drawer Unit with Polymarble Basin

	W500 x H650 x D460mm
MATT WHITE	UF0278-UF0349
MATT CORAL GREEN	UF0273-UF0349
MATT CASHMERE PINK	UF0272-UF0349
MATT MORNING SKY BLUE	UF0277-UF0349
MATT NIGHT SKY BLUE	UF0275-UF0349
MATT OCEAN BLUE	UF0276-UF0349
MATT WREATH GREEN	UF0274-UF0349
MATT MATT BLACK	UF0706-UF0349
	£745.00

550mm Wall Mounted 1 Door Unit with Polymarble Basin

	W550 x H586 x D300mm
MATT WHITE	UF0299-UF0279
MATT CORAL GREEN	UF0294-UF0279
MATT CASHMERE PINK	UF0293-UF0279
MATT MORNING SKY BLUE	UF0298-UF0279
MATT NIGHT SKY BLUE	UF0296-UF0279
MATT OCEAN BLUE	UF0297-UF0279
MATT WREATH GREEN	UF0295-UF0279
MATT MATT BLACK	UF0714-UF0279
	£477.00

Right Hand Tap Hole Only

600mm Wall Mounted 2 Drawer Unit with Polymarble Basin

	W550 x H586 x D460mm
MATT WHITE	UF0320-UF0350
MATT CORAL GREEN	UF0315-UF0350
MATT CASHMERE PINK	UF0314-UF0350
MATT MORNING SKY BLUE	UF0319-UF0350
MATT NIGHT SKY BLUE	UF0317-UF0350
MATT OCEAN BLUE	UF0318-UF0350
MATT WREATH GREEN	UF0316-UF0350
MATT MATT BLACK	UF0708-UF0350
	£785.00

Handles

CHROME UF0352 **£25.00**

MATT BLACK UF0354 **£25.00**

BRUSHED BRASS UF0353 **£25.00**

SONAS

800mm Wall Mounted 2 Drawer Unit with Polymarble Basin

	W550 x H586 x D460mm
MATT WHITE	UF0348-UF0351
MATT CORAL GREEN	UF0343-UF0351
MATT CASHMERE PINK	UF0342-UF0351
MATT MORNING SKY BLUE	UF0347-UF0351
MATT NIGHT SKY BLUE	UF0345-UF0351
MATT OCEAN BLUE	UF0346-UF0351
MATT WREATH GREEN	UF0344-UF0351
MATT MATT BLACK	UF0710-UF0351
	£985.00

600mm Polymarble Basin

Matt Black Handle

600mm Wall Mounted 2 Drawer Unit
2 Door Column Unit
Matt Cashmere Pink

SONAS

550mm Floor Standing 1 Door Unit with Polymarble Basin

	W550 x H850 x D300mm
MATT WHITE	UF0306-UF0279
MATT CORAL GREEN	UF0301-UF0279
MATT CASHMERE PINK	UF0300-UF0279
MATT MORNING SKY BLUE	UF0305-UF0279
MATT NIGHT SKY BLUE	UF0303-UF0279
MATT OCEAN BLUE	UF0304-UF0279
MATT WREATH GREEN	UF0302-UF0279
MATT MATT BLACK	UF0715-UF0279
	£521.00

NEW

Right Hand Tap Hole Only

500mm Floor Standing 2 Drawer Unit with Polymarble Basin

	W500 x H850 x D460mm
MATT WHITE	UF0292-UF0349
MATT CORAL GREEN	UF0287-UF0349
MATT CASHMERE PINK	UF0286-UF0349
MATT MORNING SKY BLUE	UF0291-UF0349
MATT NIGHT SKY BLUE	UF0289-UF0349
MATT OCEAN BLUE	UF0290-UF0349
MATT WREATH GREEN	UF0288-UF0349
MATT MATT BLACK	UF0711-UF0349
	£800.00

NEW

600mm Floor Standing 2 Drawer Unit with Polymarble Basin

	W500 x H850 x D460mm
MATT WHITE	UF0292-UF0350
MATT CORAL GREEN	UF0287-UF0350
MATT CASHMERE PINK	UF0286-UF0350
MATT MORNING SKY BLUE	UF0291-UF0350
MATT NIGHT SKY BLUE	UF0289-UF0350
MATT OCEAN BLUE	UF0290-UF0350
MATT WREATH GREEN	UF0288-UF0350
MATT MATT BLACK	UF0711-UF0350
	£800.00

NEW

Malmö

600mm Wall Mounted 1 Drawer Unit
Matt Khaki

Matt Black | Matt Cashmere Pink | Matt Morning Sky Blue | Matt Ocean Blue | Matt Night Sky Blue | Matt Khaki | Matt Midnight Grey

600mm Wall Mounted 1 Drawer Unit with Ceramic Basin

NEW

	W600 x H560 x D450mm
MATT BLACK	UF0687-UF0030
MATT CASHMERE PINK	UF0688-UF0030
MATT MORNING SKY BLUE	UF0689-UF0030
MATT OCEAN BLUE	UF0159-UF0030
MATT NIGHT SKY BLUE	UF0165-UF0030
MATT KHAKI	UF0163-UF0030
MATT MIDNIGHT GREY	UF0161-UF0030
	£625.00

600mm Wall Mounted 1 Drawer Unit with Countertop

NEW

	W600 x H525 x D450mm
MATT BLACK	UF0687-UF0716
MATT CASHMERE PINK	UF0688-UF0550
MATT MORNING SKY BLUE	UF0689-UF0551
MATT OCEAN BLUE	UF0159-UF0167
MATT NIGHT SKY BLUE	UF0165-UF0168
MATT KHAKI	UF0163-UF0172
MATT MIDNIGHT GREY	UF0161-UF0169
	£625.00

600mm Floor Standing 2 Drawer Unit with Ceramic Basin

NEW

	W600 x H860 x D450mm
MATT BLACK	UF0645-UF0030
MATT CASHMERE PINK	UF0646-UF0030
MATT MORNING SKY BLUE	UF0641-UF0030
MATT OCEAN BLUE	UF0640-UF0030
MATT NIGHT SKY BLUE	UF0642-UF0030
MATT KHAKI	UF0644-UF0030
MATT MIDNIGHT GREY	UF0643-UF0030
	£745.00

600mm Floor Standing 2 Drawer Unit with Countertop

NEW

	W600 x H820 x D450mm
MATT BLACK	UF0645-UF0716
MATT CASHMERE PINK	UF0646-UF0550
MATT MORNING SKY BLUE	UF0641-UF0551
MATT OCEAN BLUE	UF0640-UF0167
MATT NIGHT SKY BLUE	UF0642-UF0168
MATT KHAKI	UF0644-UF0172
MATT MIDNIGHT GREY	UF0643-UF0169
	£745.00

600mm Wall Mounted Unit
Matt Midnight Grey

800mm Wall Mounted 1 Drawer Unit with Ceramic Basin

NEW

	W800 x H560 x D450mm
MATT BLACK	UF0690-UF0136
MATT CASHMERE PINK	UF0691-UF0136
MATT MORNING SKY BLUE	UF0692-UF0136
MATT OCEAN BLUE	UF0160-UF0136
MATT NIGHT SKY BLUE	UF0166-UF0136
MATT KHAKI	UF0164-UF0136
MATT MIDNIGHT GREY	UF0162-UF0136
	£725.00

800mm Wall Mounted 1 Drawer Unit with Countertop

NEW

	W800 x H525 x D450mm
MATT BLACK	UF0690-UF0719
MATT CASHMERE PINK	UF0691-UF0553
MATT MORNING SKY BLUE	UF0692-UF0554
MATT OCEAN BLUE	UF0160-UF0174
MATT NIGHT SKY BLUE	UF0166-UF0175
MATT KHAKI	UF0164-UF0179
MATT MIDNIGHT GREY	UF0162-UF0176
	£725.00

800mm Floor Standing 2 Drawer Unit with Ceramic Basin

NEW

	W800 x H860 x D450mm
MATT BLACK	UF0652-UF0136
MATT CASHMERE PINK	UF0653-UF0136
MATT MORNING SKY BLUE	UF0648-UF0136
MATT OCEAN BLUE	UF0647-UF0136
MATT NIGHT SKY BLUE	UF0649-UF0136
MATT KHAKI	UF0651-UF0136
MATT MIDNIGHT GREY	UF0650-UF0136
	£895.00

800mm Floor Standing 2 Drawer Unit with Countertop

NEW

	W800 x H820 x D450mm
MATT BLACK	UF0652-UF0719
MATT CASHMERE PINK	UF0653-UF0553
MATT MORNING SKY BLUE	UF0648-UF0554
MATT OCEAN BLUE	UF0647-UF0174
MATT NIGHT SKY BLUE	UF0649-UF0175
MATT KHAKI	UF0651-UF0179
MATT MIDNIGHT GREY	UF0650-UF0176
	£895.00

800mm Wall Mounted 1 Drawer Unit
Matt Midnight Sky Blue

Handles

BRUSHED CHROME *UF0104* **£25.00**

MATT BLACK *UF0103* **£25.00**

BRUSHED BRASS *UF0105* **£25.00**

800mm Floor Standing 2 Drawer Unit
Matt Black

Stockholm

500mm Wall Mounted 1 Drawer Unit
2 Door Column Unit
Gloss White

Gloss White | Matt Black | Matt Cashmere Pink | Matt Morning Sky Blue | Matt Ocean Blue | Matt Khaki | Matt Arctic Grey | Matt Midnight Grey

500mm Wall Mounted 1 Door Cloakroom Unit with Ceramic Basin

NEW

	W500 x H650 x D380mm
GLOSS WHITE	UF0233-UF0228
MATT BLACK	UF0654-UF0228
MATT CASHMERE PINK	UF0655-UF0228
MATT MORNING SKY BLUE	UF0656-UF0228
MATT OCEAN BLUE	UF0229-UF0228
MATT KHAKI	UF0232-UF0228
MATT ARCTIC GREY	UF0231-UF0228
MATT MIDNIGHT GREY	UF0230-UF0228
	£380.00

Right Hand Tap Hole Only

500mm Wall Mounted 1 Drawer Unit with Ceramic Basin

NEW

	W500 x H460 x D380mm
GLOSS WHITE	UF0074-UF0229
MATT BLACK	UF0660-UF0229
MATT CASHMERE PINK	UF0661-UF0229
MATT MORNING SKY BLUE	UF0662-UF0229
MATT OCEAN BLUE	UF0060-UF0229
MATT KHAKI	UF0067-UF0229
MATT ARCTIC GREY	UF0081-UF0229
MATT MIDNIGHT GREY	UF0088-UF0229
	£440.00

600mm Wall Mounted 2 Drawer Unit
Matt Ocean Blue

600mm Wall Mounted 2 Drawer Unit
with Countertop
2 Door Column Unit
Matt Arctic Grey

Right Hand
Tap Hole Only

500mm Floorstanding 1 Door Cloakroom Unit with Ceramic Basin

	W500 x H860 x D380mm
GLOSS WHITE	UF0238-UF0228
MATT BLACK	UF0657-UF0228
MATT CASHMERE PINK	UF0658-UF0228
MATT MORNING SKY BLUE	UF0659-UF0228
MATT OCEAN BLUE	UF0234-UF0228
MATT KHAKI	UF0237-UF0228
MATT ARCTIC GREY	UF0236-UF0228
MATT MIDNIGHT GREY	UF0235-UF0228
	£390.00

500mm Floorstanding 2 Door Unit with Ceramic Basin

	W500 x H860 x D380mm
GLOSS WHITE	UF0077-UF0229
MATT BLACK	UF0669-UF0229
MATT CASHMERE PINK	UF0670-UF0229
MATT MORNING SKY BLUE	UF0671-UF0229
MATT OCEAN BLUE	UF0063-UF0229
MATT KHAKI	UF0070-UF0229
MATT ARCTIC GREY	UF0084-UF0229
MATT MIDNIGHT GREY	UF0091-UF0229
	£535.00

500mm Floorstanding 2 Drawer Unit with Ceramic Basin

	W500 x H860 x D380mm
GLOSS WHITE	UF0079-UF0229
MATT BLACK	UF0672-UF0229
MATT CASHMERE PINK	UF0673-UF0229
MATT MORNING SKY BLUE	UF0674-UF0229
MATT OCEAN BLUE	UF0065-UF0229
MATT KHAKI	UF0072-UF0229
MATT ARCTIC GREY	UF0086-UF0229
MATT MIDNIGHT GREY	UF0093-UF0229
	£665.00

600mm Wall Mounted 2 Drawer Unit with Ceramic Basin

	W600 x H560 x D450mm
GLOSS WHITE	UF0078-UF0030
MATT BLACK	UF0663-UF0030
MATT CASHMERE PINK	UF0664-UF0030
MATT MORNING SKY BLUE	UF0665-UF0030
MATT OCEAN BLUE	UF0061-UF0030
MATT KHAKI	UF0068-UF0030
MATT ARCTIC GREY	UF0082-UF0030
MATT MIDNIGHT GREY	UF0089-UF0030
	£665.00

600mm Wall Mounted 2 Drawer Unit with Countertop

	W600 x H525 x D450mm
GLOSS WHITE	UF0078-UF0173
MATT BLACK	UF0663-UF0716
MATT CASHMERE PINK	UF0664-UF0550
MATT MORNING SKY BLUE	UF0665-UF0551
MATT OCEAN BLUE	UF0061-UF0167
MATT KHAKI	UF0068-UF0172
MATT ARCTIC GREY	UF0082-UF0171
MATT MIDNIGHT GREY	UF0089-UF0169
	£665.00

600mm Floorstanding 2 Drawer Unit with Countertop

	W600 x H860 x D450mm
GLOSS WHITE	UF0080-UF0173
MATT BLACK	UF0678-UF0716
MATT CASHMERE PINK	UF0679-UF0550
MATT MORNING SKY BLUE	UF0680-UF0551
MATT OCEAN BLUE	UF0066-UF0167
MATT KHAKI	UF0073-UF0172
MATT ARCTIC GREY	UF0087-UF0171
MATT MIDNIGHT GREY	UF0094-UF0169
	£725.00

600mm Floorstanding 2 Drawer Unit with Countertop

NEW

	W600 x H825 x D450mm
GLOSS WHITE	*UF0080-UF0173*
MATT BLACK	*UF0678-UF0716*
MATT CASHMERE PINK	*UF0679-UF0550*
MATT MORNING SKY BLUE	*UF0680-UF0551*
MATT OCEAN BLUE	*UF0086-UF0167*
MATT KHAKI	*UF0073-UF0172*
MATT ARCTIC GREY	*UF0087-UF0171*
MATT MIDNIGHT GREY	*UF0094-UF0169*
	£725.00

600mm Floorstanding 2 Door Unit with Ceramic Basin

NEW

	W600 x H860 x D450mm
GLOSS WHITE	*UF0078-UF0030*
MATT BLACK	*UF0675-UF0030*
MATT CASHMERE PINK	*UF0676-UF0030*
MATT MORNING SKY BLUE	*UF0677-UF0030*
MATT OCEAN BLUE	*UF0064-UF0030*
MATT KHAKI	*UF0071-UF0030*
MATT ARCTIC GREY	*UF0085-UF0030*
MATT MIDNIGHT GREY	*UF0092-UF0030*
	£625.00

600mm Floorstanding 2 Door Unit with Countertop

NEW

	W600 x H825 x D450mm
GLOSS WHITE	*UF0078-UF0173*
MATT BLACK	*UF0675-UF0716*
MATT CASHMERE PINK	*UF0676-UF0550*
MATT MORNING SKY BLUE	*UF0677-UF0551*
MATT OCEAN BLUE	*UF0064-UF0167*
MATT KHAKI	*UF0071-UF0172*
MATT ARCTIC GREY	*UF0085-UF0171*
MATT MIDNIGHT GREY	*UF0092-UF0169*
	£625.00

500mm Wall Mounted Cloakroom Unit Matt Ocean Blue

Finland

800mm Wall Mounted 2 Drawer Unit with Ceramic Basin

NEW

	W800 x H560 x D450mm
GLOSS WHITE	UF0078-UF0136
MATT BLACK	UF0666-UF0136
MATT CASHMERE PINK	UF0667-UF0136
MATT MORNING SKY BLUE	UF0668-UF0136
MATT OCEAN BLUE	UF0062-UF0136
MATT KHAKI	UF0069-UF0136
MATT ARCTIC GREY	UF0083-UF0136
MATT MIDNIGHT GREY	UF0090-UF0136
	£800.00

800mm Wall Mounted 2 Drawer Unit with Countertop

NEW

	W800 x H525 x D450mm
GLOSS WHITE	UF0078-UF0180
MATT BLACK	UF0666-UF0719
MATT CASHMERE PINK	UF0667-UF0553
MATT MORNING SKY BLUE	UF0668-UF0554
MATT OCEAN BLUE	UF0062-UF0174
MATT KHAKI	UF0069-UF0179
MATT ARCTIC GREY	UF0083-UF0178
MATT MIDNIGHT GREY	UF0090-UF0176
	£800.00

Handles

BRUSHED CHROME *UF1494* **£25.00**

BRUSHED NICKEL *UF1497* **£25.00**

MATT BLACK *UF1495* **£25.00**

BRUSHED BRASS *UF1496* **£25.00**

Brushed Brass Handle

800mm Wall Mounted 2 Drawer Unit
Matt Cashmere Pink

Matt White | Matt Black | Matt Cashmere Pink | Matt Morning Sky Blue | Matt Ocean Blue | Matt Coral Green | Matt Midnight Grey

500mm Wall Mounted 2 Drawer Unit with Ceramic Basin

NEW

	W500 x H560 x D450mm
MATT WHITE	UF0516-UF0029
MATT BLACK	UF0682-UF0029
MATT CASHMERE PINK	UF0514-UF0029
MATT MORNING SKY BLUE	UF0515-UF0029
MATT OCEAN BLUE	UF0043-UF0029
MATT CORAL GREEN	UF0681-UF0029
MATT MIDNIGHT GREY	UF0049-UF0029
	£700.00

600mm Wall Mounted 2 Drawer Unit with Ceramic Basin

NEW

	W600 x H560 x D450mm
MATT WHITE	UF0519-UF0030
MATT BLACK	UF0684-UF0030
MATT CASHMERE PINK	UF0517-UF0030
MATT MORNING SKY BLUE	UF0518-UF0030
MATT OCEAN BLUE	UF0044-UF0030
MATT CORAL GREEN	UF0683-UF0030
MATT MIDNIGHT GREY	UF0050-UF0030
	£735.00

800mm Wall Mounted 2 Drawer Unit with Ceramic Basin

NEW

	W800 x H560 x D450mm
MATT WHITE	UF0522-UF0136
MATT BLACK	UF0686-UF0136
MATT CASHMERE PINK	UF0520-UF0136
MATT MORNING SKY BLUE	UF0521-UF0136
MATT OCEAN BLUE	UF0045-UF0136
MATT CORAL GREEN	UF0685-UF0136
MATT MIDNIGHT GREY	UF0051-UF0136
	£875.00

500mm Floorstanding 2 Drawer Unit with Ceramic Basin

NEW

	W500 x H860 x D450mm
MATT WHITE	UF0602-UF0029
MATT BLACK	UF0603-UF0029
MATT CASHMERE PINK	UF0606-UF0029
MATT MORNING SKY BLUE	UF0605-UF0029
MATT OCEAN BLUE	UF0604-UF0029
MATT CORAL GREEN	UF0608-UF0029
MATT MIDNIGHT GREY	UF0607-UF0029
	£745.00

600mm Wall Mounted 2 Drawer Unit
Matt Ocean Blue

800mm Wall Mounted 2 Drawer Unit
2 Door Column Unit
Matt Midnight Grey

600mm Floorstanding 2 Drawer Unit
WC Unit
Bath Panel
Matt Coral Green

Kora

600mm Floorstanding 2 Drawer Unit with Ceramic Basin

NEW

	W600 x H860 x D450mm
MATT WHITE	UF0609-UF0030
MATT BLACK	UF0610-UF0030
MATT CASHMERE PINK	UF0613-UF0030
MATT MORNING SKY BLUE	UF0612-UF0030
MATT OCEAN BLUE	UF0611-UF0030
MATT CORAL GREEN	UF0615-UF0030
MATT MIDNIGHT GREY	UF0614-UF0030
	£825.00

600mm Wall Mounted 2 Drawer Unit with Countertop

NEW

	W600 x H520 x D450mm
MATT WHITE	UF0519-UF0552
MATT BLACK	UF0684-UF0716
MATT CASHMERE PINK	UF0517-UF0550
MATT MORNING SKY BLUE	UF0518-UF0551
MATT OCEAN BLUE	UF0044-UF0167
MATT CORAL GREEN	UF0683-UF0717
MATT MIDNIGHT GREY	UF0050-UF0169
	£735.00

600mm Floorstanding 2 Drawer Unit with Countertop

NEW

	W600 x H820 x D450mm
MATT WHITE	UF0609-UF0552
MATT BLACK	UF0610-UF0716
MATT CASHMERE PINK	UF0613-UF0550
MATT MORNING SKY BLUE	UF0612-UF0551
MATT OCEAN BLUE	UF0611-UF0167
MATT CORAL GREEN	UF0615-UF0717
MATT MIDNIGHT GREY	UF0614-UF0169
	£825.00

800mm Wall Mounted 2 Drawer Unit with Countertop

NEW

	W600 x H820 x D450mm
MATT WHITE	UF0522-UF0555
MATT BLACK	UF0686-UF0719
MATT CASHMERE PINK	UF0520-UF0553
MATT MORNING SKY BLUE	UF0521-UF0554
MATT OCEAN BLUE	UF0045-UF0174
MATT CORAL GREEN	UF0685-UF0720
MATT MIDNIGHT GREY	UF0051-UF0176
	£875.00

Gloss White | Matt Black | Matt Morning Sky Blue | Matt Arctic Grey | Matt Sun Kissed Yellow

500mm Wall Mounted 2 Drawer Unit with Ceramic Basin

NEW

	W500 x H680 x D460mm
GLOSS WHITE	UF0440-USW0007
MATT MORNING SKY BLUE	UF0444-USW0007
MATT SUN KISSED YELLOW	UF0442-USW0007
MATT BLACK	UF0441-USW0007
MATT ARCTIC GREY	UF0443-USW0007
	£725.00

500mm Floorstanding 2 Drawer Unit with Ceramic Basin

NEW

	W500 x H880 x D460mm
GLOSS WHITE	UF0450-USW0007
MATT MORNING SKY BLUE	UF0454-USW0007
MATT SUN KISSED YELLOW	UF0452-USW0007
MATT BLACK	UF0451-USW0007
MATT ARCTIC GREY	UF0453-USW0007
	£725.00

600mm Wall Mounted 2 Drawer Unit with Ceramic Basin

NEW

	W600 x H680 x D460mm
GLOSS WHITE	UF0445-USW0008
MATT MORNING SKY BLUE	UF0449-USW0008
MATT SUN KISSED YELLOW	UF0447-USW0008
MATT BLACK	UF0446-USW0008
MATT ARCTIC GREY	UF0448-USW0008
	£775.00

600mm Floorstanding 2 Drawer Unit with Ceramic Basin

NEW

	W600 x H880 x D460mm
GLOSS WHITE	UF0455-USW0008
MATT MORNING SKY BLUE	UF0459-USW0008
MATT SUN KISSED YELLOW	UF0457-USW0008
MATT BLACK	UF0456-USW0008
MATT ARCTIC GREY	UF0458-USW0008
	£825.00

Kora Handle Brushed Chrome

Handles

BRUSHED CHROME	UF0460	**£25.00**

MATT BLACK	UF0461	**£25.00**

600mm Floorstanding 2 Drawer Unit
Matt Sun Kissed Yellow

SONAS

500mm Wall Mounted 2 Drawer Unit
Matt Arctic Grey

Fjord

800mm Wall Mounted 1 Drawer Unit
with Hidden Drawer
Column Unit
Gloss White

Gloss White | Matt Black | Matt Cashmere Pink | Matt Ocean Blue | Matt Khaki | Matt Midnight Grey

500mm Wall Mounted 1 Drawer Unit with Hidden Drawer & Ceramic Basin

NEW

	W500 x H550 x D380mm
GLOSS WHITE	UF0037-UF0029
MATT BLACK	UF0700-UF0029
MATT CASHMERE PINK	UF0699-UF0029
MATT OCEAN BLUE	UF0031-UF0029
MATT KHAKI	UF0034-UF0029
MATT MIDNIGHT GREY	UF0040-UF0029
	£640.00

600mm Wall Mounted 1 Drawer Unit with Hidden Drawer & Ceramic Basin

NEW

	W600 x H550 x D450mm
GLOSS WHITE	UF0038-UF0030
MATT BLACK	UF0702-UF0030
MATT CASHMERE PINK	UF0701-UF0030
MATT OCEAN BLUE	UF0032-UF0030
MATT KHAKI	UF0035-UF0030
MATT MIDNIGHT GREY	UF0041-UF0030
	£725.00

800mm Wall Mounted 1 Drawer Unit with Hidden Drawer & Ceramic Basin

NEW

	W800 x H550 x D380mm
GLOSS WHITE	UF0039-UF0136
MATT BLACK	UF0704-UF0136
MATT CASHMERE PINK	UF0703-UF0136
MATT OCEAN BLUE	UF0033-UF0136
MATT KHAKI	UF0036-UF0136
MATT MIDNIGHT GREY	UF0042-UF0136
	£825.00

Handles

CHROME *UF1494* **£25.00**

MATT BLACK *UF1495* **£25.00**

BRUSHED NICKEL *UF1497* **£25.00**

BRUSHED BRASS *UF1496* **£25.00**

600mm Wall Mounted 1 Drawer Unit with Hidden Drawer & Countertop

	W600 x H520 x D450mm
GLOSS WHITE	UF0038-UF0173
MATT BLACK	UF0702-UF0716
MATT CASHMERE PINK	UF0701-UF0550
MATT OCEAN BLUE	UF0032-UF0167
MATT KHAKI	UF0035-UF0172
MATT MIDNIGHT GREY	UF0041-UF0169
	£725.00

NEW

800mm Wall Mounted 1 Drawer Unit with Hidden Drawer & Countertop

NEW

	W800 x H520 x D450mm
GLOSS WHITE	UF0039-UF0180
MATT BLACK	UF0704-UF0719
MATT CASHMERE PINK	UF0703-UF0553
MATT OCEAN BLUE	UF0033-UF0174
MATT KHAKI	UF0036-UF0179
MATT MIDNIGHT GREY	UF0042-UF0178
	£825.00

600mm Wall Mounted
1 Drawer Unit
with Hidden Drawer
& Countertop
Matt Midnight Grey

600mm Wall Mounted
1 Drawer Unit
with Hidden Drawer
Gloss White

500mm Wall Mounted 1 Drawer Unit
with Hidden Drawer
2 Door Column Unit
Ocean Blue

Furniture **Universal Bath Panels & Column Units**

NEW

Universal finishes for Sonas Bath Panels and Column units, fully compatible with all Sonas bathroom furniture.

Height-Adjustable (min 400mm/max 590mm)

GLOSS WHITE

MATT WHITE

MATT CASHMERE PINK

MATT BLACK

MATT SUN KISSED YELLOW

MATT KHAKI

MATT MORNING SKY BLUE

MATT OCEAN BLUE

MATT NIGHT SKY BLUE

MATT MIDNIGHT GREY

MATT CORAL GREEN

MATT WREATH GREEN

MATT ARCTIC GREY

	FRONT PANELS		END PANELS		
	W1700mm	W1800mm	W700mm	W750mm	W800mm
GLOSS WHITE	UF0187	UF0194	UF0201	UF0208	UF0215
MATT WHITE	UF0378	UF0383	UF0388	UF0393	UF0398
MATT BLACK	UF0504	UF0505	UF0506	UF0507	UF0508
MATT SUN KISSED YELLOW	UF0509	UF0510	UF0511	UF0512	UF0513
MATT CASHMERE PINK	UF0380	UF0385	UF0390	UF0395	UF0400
MATT MORNING SKY BLUE	UF0379	UF0384	UF0389	UF0394	UF0399
MATT OCEAN BLUE	UF0181	UF0188	UF0195	UF0202	UF0209
MATT NIGHT SKY BLUE	UF0182	UF0189	UF0196	UF0203	UF0210
MATT KHAKI	UF0186	UF0193	UF0200	UF0207	UF0214
MATT CORAL GREEN	UF0381	UF0386	UF0391	UF0396	UF0401
MATT WREATH GREEN	UF0382	UF0387	UF0392	UF0397	UF0402
MATT ARCTIC GREY	UF0185	UF0192	UF0199	UF0206	UF0213
MATT MIDNIGHT GREY	UF0183	UF0190	UF0197	UF0204	UF0211
	£260.00	£265.00	£130.00	£145.00	£145.00

NEW

GLOSS WHITE
W300 x H1500 x D240mm
UF0098
£575.00

MATT WHITE
W300 x H1500 x D240mm
UF0373
£575.00

MATT BLACK
W300 x H1500 x D240mm
UF0502
£575.00

MATT SUN KISSED YELLOW
W300 x H1500 x D240mm
UF0503
£575.00

MATT CASHMERE PINK
W300 x H1500 x D240mm
UF0375
£575.00

MATT MORNING SKY BLUE
W300 x H1500 x D240mm
UF0374
£575.00

MATT OCEAN BLUE
W300 x H1500 x D240mm
UF0095
£575.00

MATT NIGHT SKY BLUE
W300 x H1500 x D240mm
UF0264
£575.00

MATT KHAKI
W300 x H1500 x D240mm
UF0097
£575.00

MATT CORAL GREEN
W300 x H1500 x D240mm
UF0376
£575.00

MATT WREATH GREEN
W300 x H1500 x D240mm
UF0377
£575.00

MATT ARCTIC GREY
W300 x H1500 x D240mm
UF1716
£575.00

MATT MIDNIGHT GREY
W300 x H1500 x D240mm
UF0099
£575.00

GLOSS WHITE

Universal Sonas BTW Unit finishes are fully compatable with all Sonas bathroom furniture.

Available with Concealed Cistern or Choose Your Own

SEE PAGE 136

MATT WHITE

MATT BLACK

MATT CASHMERE PINK

MATT MORNING SKY BLUE

MATT OCEAN BLUE

MATT NIGHT SKY BLUE

MATT KHAKI

MATT CORAL GREEN

MATT WREATH GREEN

MATT ARCTIC GREY

MATT MIDNIGHT GREY

W500 x H800 x D250mm

	BTW Unit Only	BTW Unit with Conceled Cistern
GLOSS WHITE	*UF0628*	*UF1160*
MATT WHITE	*UF0629*	*UF1161*
MATT BLACK	*UF0630*	*UF1162*
MATT CASHMERE PINK	*UF0631*	*UF1163*
MATT MORNING SKY BLUE	*UF0632*	*UF1164*
MATT OCEAN BLUE	*UF0633*	*UF1165*
MATT NIGHT SKY BLUE	*UF0634*	*UF1166*
MATT KHAKI	*UF0635*	*UF1167*
MATT CORAL GREEN	*UF0636*	*UF1168*
MATT WREATH GREEN	*UF0637*	*UF1169*
MATT ARCTIC GREY	*UF0638*	*UF1170*
MATT MIDNIGHT GREY	*UF0639*	*UF1171*
	£340.00	**£450.00**

Flush Button Upgrades

BRUSHED NICKEL	*USW0418*
MATT BLACK	*USW0416*
BRUSHED BRASS	*USW0417*
	£30.00

BTW Unit
2 Door Column Unit
Matt Cashmere Pink

MIRRORS

Take a look at our beautiful range of LED mirrors and mirrored cabinets, with many features, shapes and sizes to compliment any bathroom.

Burleigh LED Mirror

- Frame Lit
- Energy Efficient LED Lights
- Touch Switch
- 3 Tone Ambient Lighting
- Heated Demister Pad

	600mm dia	800mm dia
FROSTED FRAME	*BUW60*	*BUW80*
	£374.00	**£426.00**

Reno LED Mirror

- Frame Lit
- Energy Efficient LED Lights
- Touch Switch
- 3 Tone Ambient Lighting
- Heated Demister Pad

	600mm dia
MATT BLACK FRAME	*MIR026*
	£343.00

Denton LED Mirror

- Frame Lit
- Energy Efficient LED Lights
- Touch Switch
- 3 Tone Ambient Lighting
- Heated Demister Pad

	600mm dia
BRUSHED BRASS FRAME	*MIR028*
	£374.00

Tucson LED Mirror

- Back Lit
- Energy Efficient LED Lights
- Sensor Switch
- 3 Tone Ambient Lighting
- Heated Demister Pad

600mm dia	800mm dia	1000mm dia
MIR022	*MIR023*	*MIR024*
£311.00	**£363.00**	**£467.00**

Memphis LED Mirror

- Frame Lit
- Energy Efficient LED Lights
- Touch Switch
- 3 Tone Ambient Lighting
- Heated Demister Pad

	600mm dia
BRUSHED BRASS FRAME	*MIR018BB*
	£414.00

Newark LED Mirror

- Frame Lit
- Energy Efficient LED Lights
- Touch Switch
- 3 Tone Ambient Lighting
- Heated Demister Pad

	600mm dia
MATT BLACK FRAME	*MIR010B*
	£398.00

Burleigh
LED Mirror

MIRRORS

Seattle LED Mirror

- Slim Frame Lit
- Energy Efficient LED Lights
- Sensor Switch
- 3 Tone Ambient Lighting
- Heated Demister Pad
- Landscape or Portrait

W500 x H700mm	W600 x H800mm
MIR019	*MIR020*
£343.00	**£395.00**

Stockton LED Mirror

- Back Lit
- Energy Efficient LED Lights
- Sensor Switch
- 3 Tone Ambient Lighting
- Heated Demister Pad
- Portrait Only

W500 x H900mm
MIR025
£343.00

Hampton LED Mirror

- Back Lit
- Energy Efficient LED Lights
- Sensor Switch
- 3 Tone Ambient Lighting
- Heated Demister Pad
- Landscape or Portrait

W500 x H700mm	W600 x H800mm
MIR005-1	*MIR005-2*
£337.00	**£361.00**

Seattle LED Mirror

- Slim Frame Lit
- Energy Efficient LED Lights
- Sensor Switch
- 3 Tone Ambient Lighting
- Heated Demister Pad
- Landscape Only

W1200 x H600mm
MIR021
£602.00

Hampton LED Mirror

- Back Lit
- Energy Efficient LED Lights
- Sensor Switch
- 3 Tone Ambient Lighting
- Heated Demister Pad
- Landscape Only

W1200 x H600mm
MIR014
£602.00

MIRRORS

Stockton
LED Mirror

Corona LED Mirror

- Frame Lit
- Energy Efficient LED Lights
- Sensor Switch
- 3 Tone Ambient Lighting
- Heated Demister Pad
- Portrait Only

	W500 x H700mm
MATT BLACK FRAME	*MIR027*
	£343.00

Stamford LED Mirror

- Frame Lit
- Energy Efficient LED Lights
- Sensor Switch
- 3 Tone Ambient Lighting
- Heated Demister Pad
- Portrait Only

	W500 x H700mm
BRUSHED BRASS FRAME	*MIR029*
	£363.00

Maddison LED Mirror

- Back Lit
- Energy Efficient LED Lights
- Sensor Switch
- 3 Tone Ambient Lighting
- Heated Demister Pad
- Portrait or Landscape

	W500 x H700mm
	MIR007-1
	£337.00

Eclipse LED Mirror

- Back Lit
- Energy Efficient LED Lights
- Touch Switch
- 3 Tone Ambient Lighting
- Heated Demister Pad

NEW

	W800 x H700mm
	EC8070
	£399.00

Orlando LED Mirror

- Backlit
- Energy Efficient LED Lights
- Sensor Switch
- 3 Tone Ambient Lighting
- Heated Demister Pad

	600mm dia
BRUSHED BRASS FRAME	*MIR017BB*
	£393.00

Denver LED Mirror

- Frame Lit
- Energy Efficient LED Lights
- Sensor Switch
- 3 Tone Ambient Lighting
- Heated Demister Pad
- Landscape or Portrait

	W500 x H700mm	W600 x H800mm
BRUSHED BRASS FRAME	*MIR015BB*	*MIR016BB*
	£393.00	**£414.00**

Eclipse
LED Mirror

MIRRORS

Carter Mirror

NEW

- Non-illuminated
- No Bevelled Edges
- Landscape or Portrait

W400 x H900 x D10mm
MIRPL105
£120.00

Non-Illuminated

Truman Mirror

NEW

- Non-illuminated
- No Bevelled Edges

Dia600 x D10mm
MIRPL106
£120.00

Non-Illuminated

NEW

Roosevelt Mirror

Non-Illuminated

- Non-illuminated
- Sleek Mirrored Frame
- No Bevelled Edges
- Landscape or Portrait

W500 x H700mm	W600 x H800mm
MIRPL101	*MIRPL102*
£110.00	**£120.00**

Lincoln Mirror

NEW

- Non-Illuminated
- Mirrored Frame
- No Bevelled Edges
- Rounded Corners
- Landscape or Portrait

W500 x H700 x D10mm
MIRPL100
£120.00

Non-Illuminated

Nixon Mirror

NEW

- Non-illuminated
- No Bevelled Edges
- Rounded Corners
- Landscape or Portrait

W500 x H700 x D10mm	W600 x H800 x D10mm
MIRPL103	*MIRPL104*
£110.00	**£120.00**

Non-Illuminated

MIRRORS

Echo Arena

- Energy Efficient LED Lights
- Touch Switch
- Dimmable Ambient Lighting
- Heated Demister Pad

LED POWERED BY SAMSUNG

W450 x H900mm

UM0049

£425.00

- Energy Efficient LED Lights
- Touch Switch
- DimWmable Ambient Lighting
- Heated Demister Pad

LED POWERED BY SAMSUNG

W450 x H900mm

MATT BLACK FRAME *UM0050*

£450.00

- Energy Efficient LED Lights
- Touch Switch
- Dimmable Ambient Lighting
- Heated Demister Pad

LED POWERED BY SAMSUNG

W450 x H900mm

BRUSHED BRASS FRAME *UM0051*

£450.00

Echo Round

- Energy Efficient LED Lights
- Touch Switch
- Dimmable Ambient Lighting
- Heated Demister Pad

LED POWERED BY SAMSUNG

	600mm dia	800mm dia
	UM0059	*UM0060*
	£365.00	**£395.00**

- Energy Efficient LED Lights
- Touch Switch
- Dimmable Ambient Lighting
- Heated Demister Pad

LED POWERED BY SAMSUNG

	600mm dia	800mm dia
MATT BLACK FRAME	*UM0061*	*UM0063*
	£395.00	**£445.00**

- Energy Efficient LED Lights
- Touch Switch
- Dimmable Ambient Lighting
- Heated Demister Pad

LED POWERED BY SAMSUNG

	600mm dia	800mm dia
BRUSHED BRASS FRAME	*UM0062*	*UM0064*
	£395.00	**£495.00**

MIRRORS

MIRRORS

Echo Rectangle

- Energy Efficient LED Lights
- Touch Switch
- Dimmable Ambient Lighting
- Heated Demister Pad

LED POWERED BY SAMSUNG

	W500 x H700mm	W600 x H800mm
	UM0053	UM0054
	£365.00	£395.00

- Energy Efficient LED Lights
- Touch Switch
- Dimmable Ambient Lighting
- Heated Demister Pad

LED POWERED BY SAMSUNG

	W500 x H700mm	W600 x H800mm
MATT BLACK FRAME	UM0055	UM0057
	£395.00	£445.00

- Energy Efficient LED Lights
- Touch Switch
- Dimmable Ambient Lighting
- Heated Demister Pad

LED POWERED BY SAMSUNG

	W500 x H700mm	W600 x H800mm
BRUSHED BRASS FRAME	UM0056	UM0058
	£395.00	£495.00

Echo Eclipse

- Energy Efficient LED Lights
- Touch Switch
- Dimmable Ambient Lighting
- Heated Demister Pad

LED POWERED BY SAMSUNG

W1150 x H800mm

UM0052

£695.00

MIRRORS

Bellissima Single Door LED Cabinet

- LED Door Lighting
- Under-Cabinet Lighting
- Energy Efficient LED Lights
- Mirrored Internal Door
- Sensor Switch
- 3 Tone Ambient Lighting
- Heated Demister Pad
- Charging Socket
- Aluminium Casing
- 2 Adjustable Glass Shelves

W500 x H700 x D130mm

BEL1DCAB

£586.00

Bellissima Double Door LED Cabinet

- LED Door Lighting
- Under-Cabinet Lighting
- Energy Efficient LED Lights
- Mirrored Internal Door
- Sensor Switch
- 3 Tone Ambient Lighting
- Heated Demister Pad
- Charging Socket
- Aluminium Casing
- 2 Adjustable Glass Shelves

W600 x H700 x D130mm

BEL2DCAB

£718.00

Spectrum LED Cabinet

- LED Door Lighting
- Energy Efficient LED Lights
- Mirrored Internal Door
- Sensor Switch
- 3 Tone Ambient Lighting
- Heated Demister Pad
- Charging Socket
- Aluminium Casing
- 2 Adjustable Glass Shelves

NEW

W500 x H700 x D130mm

SP5070MC

£471.00

Link LED Cabinet

- LED Door Lighting
- Energy Efficient LED Lights
- Mirrored Internal Door
- Sensor Switch
- 3 Tone Ambient Lighting
- Heated Demister Pad
- Charging Socket
- Aluminium Casing
- 2 Adjustable Glass Shelves

NEW

W500 x H700 x D130mm

LI5070MC

£471.00

MIRRORED CABINETS

Frame LED Cabinet

- LED Door Lighting
- Energy Efficient LED Lights
- Mirrored Internal Door
- Sensor Switch
- 3 Tone Ambient Lighting
- Heated Demister Pad
- Charging Socket
- Aluminium Casing
- 2 Adjustable Glass Shelves

NEW

W500 x H700 x D130mm

FR5070MC

£471.00

Fine LED Cabinet

- LED Door Lighting
- Energy Efficient LED Lights
- Mirrored Internal Door
- Sensor Switch
- 2 Tone Ambient Lighting
- Heated Demister Pad
- Charging Socket
- Aluminium Casing
- 2 Adjustable Glass Shelves

NEW

W500 x H700 x D130mm

FI5070MC

£471.00

SANITARYWARE

WC & Basin Guide

Close Coupled (C/C)

Standard Close Coupled WC. Cistern is visible for ease-of-access. Mounted directly to pan.

Close to Wall

Similar to a C/C WC, however pan extends back to fit flush with wall, so all pipework is hidden from view.

Comfort Height

A C/C or BTW pan with raised height. More comfortable for those who are taller or have mobility issues.

Back to Wall (BTW)

Cistern and pipework are hidden within wall or WC unit. Requires separate concealed cistern.

Wall Mounted

Mounted to wall with pipework hidden inside. Requires an in-wall frame and cistern.

Pedestal

Standard basin resting on top of a full pedestal which supports the basin and conceals the pipework.

Semi Pedestal

A wall mounted basin taking advantage of a smaller pedestal to conceal pipework.

Semi Recess

A low profile basin mounted into a worktop with the pipework concealed inside a vanity unit.

Countertop

A standalone basin which sits on a worktop– pair with a hi-rise or wall mounted basin mixer (see from page 242) for a stylish solution.

Wave

Square Back to Wall Pan

Round Close Coupled Pan

- 2 Seat Options
- Soft Close Seat
- Quick Release
- Rimless

WITH CISTERN & WRAP SOFT CLOSE SEAT	*WAVRPAN-WAVCIST-WAVRWSEAT*	**£499.00**
WITH CISTERN & SLIM SOFT CLOSE SEAT	*WAVRPAN-WAVCIST-WAVSSEAT*	**£499.00**

Round Comfort Height Pan

- 2 Seat Options
- Comfort Height (H460mm)
- Soft Close Seat
- Quick Release
- Rimless

WITH CISTERN & WRAP SOFT CLOSE SEAT	*WAVRCOM-WAVCIST-WAVRWSEAT*	**£529.00**
WITH CISTERN & SLIM SOFT CLOSE SEAT	*WAVRCOM-WAVCIST-WAVSSEAT*	**£529.00**

Round Close to Wall Pan

- 2 Seat Options
- Soft Close Seat
- Quick Release
- Rimless

WITH CISTERN & WRAP SOFT CLOSE SEAT	*WAVRCTW-WAVCIST-WAVRWSEAT*	**£529.00**
WITH CISTERN & SLIM SOFT CLOSE SEAT	*WAVRCTW-WAVCIST-WAVSSEAT*	**£529.00**

Round Back to Wall Pan

- 2 Seat Options
- Soft Close Seat
- Quick Release
- Rimless

WITH CISTERN & WRAP SOFT CLOSE SEAT	*WAVRBTW-WAVRWSEAT*	**£349.00**
WITH CISTERN & SLIM SOFT CLOSE SEAT	*WAVRBTW-WAVSSEAT*	**£349.00**

Pan Fixing Kits

MATT BLACK	*PANFMB*
BRUSHED BRASS	*PANFBB*
	£12.00

Hinge Covers

MATT BLACK	*WAVSCMB*
BRUSHED BRASS	*WAVSCBB*
	£14.00

Cistern Buttons

MATT BLACK	*WAVCBMB*
BRUSHED BRASS	*WAVCBBB*
	£32.00

Round Back to Wall Pan

BENKÉ

Square Close Coupled Pan

- 2 Seat Options
- Soft Close Seat
- Rimless

WITH CISTERN & WRAP SOFT CLOSE SEAT	*WAVSPAN-WAVCIST-WAVSWSEAT*	**£499.00**
WITH CISTERN & SLIM SOFT CLOSE SEAT	*WAVSPAN-WAVCIST-WAVSSSEAT*	**£499.00**

Square Comfort Height Pan

- 2 Seat Options
- Comfort Height (H460mm)
- Soft Close Seat
- Rimless

WITH CISTERN & WRAP SOFT CLOSE SEAT	*WAVSCOM-WAVCIST-WAVSWSEAT*	**£529.00**
WITH CISTERN & SLIM SOFT CLOSE SEAT	*WAVSCOM-WAVCIST-WAVSSSEAT*	**£529.00**

Square Close to Wall Pan

- 2 Seat Options
- Soft Close Seat
- Rimless

WITH CISTERN & WRAP SOFT CLOSE SEAT	*WAVSCTW-WAVCIST-WAVSWSEAT*	**£529.00**
WITH CISTERN & SLIM SOFT CLOSE SEAT	*WAVSCTW-WAVCIST-WAVSSSEAT*	**£529.00**

Square Back to Wall Pan

- 2 Seat Options
- Soft Close Seat
- Rimless

WITH CISTERN & WRAP SOFT CLOSE SEAT	*WAVSBTW-WAVSWSEAT*	**£349.00**
WITH CISTERN & SLIM SOFT CLOSE SEAT	*WAVSBTW-WAVSSSEAT*	**£349.00**

Coral

Round Comfort Height Close to Wall Pan

Close Coupled Pan

- Soft Close Seat
- Rimless

WITH CISTERN & SOFT CLOSE SEAT	*CORPAN-CORCIST-CORSEAT*	**£426.00**

Close to Wall Pan

- Soft Close Seat
- Rimless

WITH CISTERN & SOFT CLOSE SEAT	*CORCTW-CORCIST-CORSEAT*	**£501.00**

Comfort Height Pan

- Comfort Height (H460mm)
- Soft Close Seat
- Rimless

WITH CISTERN & SOFT CLOSE SEAT	*CORCOM-CORCIST-CORSEAT*	**£501.00**

Comfort Height Close to Wall Pan

- Comfort Height (H460mm)
- Soft Close Seat
- Rimless

WITH CISTERN & SOFT CLOSE SEAT	*CORCOMCTW-CORCIST-CORSEAT*	**£519.00**

Back to Wall Pan

- Soft Close Seat
- Rimless

SOFT CLOSE SEAT	*CORBTW-CORSEAT*	**£280.00**

Comfort Height Back to Wall Pan

- Comfort Height (H460mm)
- Soft Close Seat
- Rimless

WITH SOFT CLOSE SEAT	*CORCOMBTW-CORSEAT*	**£329.00**

Wall Mounted Pan

- Soft Close Seat
- Rimless

WITH SOFT CLOSE SEAT	*CORWALL-CORSEAT*	**£305.00**

Pan Fixing Kits

MATT BLACK	*PANFMB*
BRUSHED BRASS	*PANFBB*
	£12.00

Hinge Covers

MATT BLACK	*CORSCMB*
BRUSHED BRASS	*CORSCBB*
	£14.00

Cistern Buttons

MATT BLACK	*WAVCBMB*
BRUSHED BRASS	*WAVCBBB*
	£32.00

BENKÉ

Genoa

1 Tap Hole Semi Recess Basin

W510mm
COR51SRBAS
£209.00

1 Tap Hole Basin with Semi Pedestal

W450mm	W550mm
COR45BAS-CORSEMPED	*COR55BAS-CORSEMPED*
£159.00	**£185.00**

1 Tap Hole Basin with Pedestal

W450mm	W500mm	W550mm
COR45BAS-CORPED	*COR50BAS-COR50PED*	*COR55BAS-CORPED*
£159.00	**£185.00**	**£185.00**

Round Comfort Height Close to Wall Pan

Round Back to Wall Pan

- Soft Close Seat
- Rimless

WITH CISTERN & SOFT CLOSE SEAT	*GEN026RO-GEN025RO*	**£390.00**

Round Wall Mounted Pan

- Soft Close Seat
- Rimless

WITH CISTERN & SOFT CLOSE SEAT	*GEN027RO-GEN025RO*	**£427.00**

Round Close to Wall Pan

- Soft Close Seat
- Rimless

WITH CISTERN & SOFT CLOSE SEAT	*GEN020RO-GEN024RO-GEN025RO*	**£538.00**

Round Comfort Height Close to Wall Pan

- Soft Close Seat
- Comfort Height (H450mm)
- Rimless

WITH CISTERN & SOFT CLOSE SEAT	*GEN028RO-GEN024RO-GEN025RO*	**£588.00**

Pan Fixing Kits

MATT BLACK	*PANFMB*
BRUSHED BRASS	*PANFBB*
	£12.00

Cistern Buttons

MATT BLACK	*WAVCBMB*
BRUSHED BRASS	*WAVCBBB*
	£34.00

Hinge Covers

MATT BLACK	*WAVSCMB*
BRUSHED BRASS	*WAVSCBB*
	£14.00

BENKÉ

Square Back to Wall Pan

- Soft Close Seat
- Rimless

SOFT CLOSE SEAT	*GEN006SQ-GEN005SQ*	**£428.00**

Square Wall Mounted Pan

- Soft Close Seat
- Rimless

SOFT CLOSE SEAT	*GEN007SQ-GEN005SQ*	**£433.00**

Square Close Coupled Pan

- Soft Close Seat
- Rimless

WITH CISTERN & SOFT CLOSE SEAT	*GEN002SQ-GEN004SQ-GEN005SQ*	**£555.00**

Square Close to Wall Pan

- Soft Close Seat
- Rimless

WITH CISTERN & SOFT CLOSE SEAT	*GEN001SQ-GEN004SQ-GEN005SQ*	**£610.00**

Cameo

Close to Wall Pan

Close Coupled Pan

- Soft Close Seat
- Rimless

WITH CISTERN & SOFT CLOSE SEAT	*POT530CA-POT531CA-SEA102D*	**£486.00**

Close to Wall Pan

- Soft Close Seat
- Rimless

WITH CISTERN & SOFT CLOSE SEAT	*POT541CA-POT531CA-SEA102D*	**£501.00**

Comfort Height Close to Wall Pan

- Soft Close Seat
- Comfort Height (H470mm)
- Rimless

WITH CISTERN & SOFT CLOSE SEAT	*POT535CA-POT531CA-SEA102D*	**£595.00**

Wall Mounted Pan

- Soft Close Seat
- Rimless

WITH SOFT CLOSE SEAT	*POT539CA-SEA102D*	**£360.00**

Back to Wall Pan

- Soft Close Seat
- Rimless

SOFT CLOSE SEAT	*POT537CA-SEA102D*	**£345.00**

1 Tap Hole Semi Recess Basin

W560mm
POT545KA
£233.00

1 Tap Hole Basin with Semi Pedestal

W450mm	W500mm	W550mm
POT544KA-POT533KA	*POT543KA-POT533KA*	*POT542KA-POT533KA*
£159.00	**£185.00**	**£185.00**

1 Tap Hole Basin with Pedestal

W450mm	W500mm	W550mm
POT544KA-POT532KA	*POT543KA-POT532KA*	*POT542KA-POT532KA*
£159.00	**£185.00**	**£185.00**

Pan Fixing Kits

MATT BLACK	*PANFMB*
BRUSHED BRASS	*PANFBB*
	£12.00

Cistern Buttons

MATT BLACK	*WAVCBMB*
BRUSHED BRASS	*WAVCBBB*
	£34.00

Hinge Covers

MATT BLACK	*CPS601BL*
BRUSHED BRASS	*CPS102BB*
	£14.00

Concealed Cisterns

Selection of concealed cisterns and frames to match with BTW units.

Modena 820mm Concealed Cistern

- Dual Flush
- Top or Front Access
- Compatible with all Modena Flush Plates
- Strong & durable plastic construction
- Siphon can be modified to provide a dual flush of either 6L/3L (standard) or 4.5L/3L
- WRAS Approved

***Flush elbow fixed in place and cannot be moved**

W404 x D130mm

820MM *MODCIST820* **£186.00**

Modena 980mm Concealed Cistern

- Dual Flush
- Top or Front Access
- Compatible with all Modena Flush Plates
- Strong & durable plastic construction
- Siphon can be modified to provide a dual flush of either 6L/3L (standard) or 4.5L/3L
- WRAS Approved

***Flush pipe can be reduced in length**

W404 x D130mm

980MM *MODCIST980* **£186.00**

Modena 1180mm Concealed Cistern

- Dual Flush
- Top or Front Access
- Compatible with all Modena Flush Plates
- Strong & durable plastic construction
- Siphon can be modified to provide a dual flush of either 6L/3L (standard) or 4.5L/3L
- WRAS Approved

***Flush pipe can be reduced in length**

W410 x D116mm

1180MM *MODCIST1180* **£186.00**

Modena 820mm Concealed Wall Frame

- Front Access
- Compatible with all Modena Flush Plates
- Includes Straight & Angled Soil Pipes
- Siphon can be modified to provide a dual flush of either 6L/3L (standard) or 4.5L/3L
- WRAS Approved
- Supplied with Full Pre-Wall Installation Bolt Kit
- Frames fully tested to 400kg support weight

H820 x W500 x D160mm

820MM *MODFR820* **£426.00**

Modena 980mm Concealed Wall Frame

- Front Access
- Compatible with all Modena Flush Plates
- Includes Straight & Angled Soil Pipes
- Siphon can be modified to provide a dual flush of either 6L/3L (standard) or 4.5L/3L
- WRAS Approved
- Supplied with Full Pre-Wall Installation Bolt Kit
- Frames fully tested to 400kg support weight

H980 x W500 x D160mm

980MM *MODFR980* **£426.00**

Modena 1180mm Concealed Wall Frame

- Front Access
- Compatible with all Modena Flush Plates
- Includes Straight & Angled Soil Pipes
- Siphon can be modified to provide a dual flush of either 6L/3L (standard) or 4.5L/3L
- WRAS Approved
- Supplied with Full Pre-Wall Installation Bolt Kit
- Frames fully tested to 400kg support weight

H1185 x W500 x D160mm

1180MM *MODFR1180* **£426.00**

Modena Rule Flush Plates (W236 x H152)

CHROME ABS
RULFPCH
£76.00

MATT BLACK ABS
RULFPMB
£76.00

Modena Globe Flush Plates (W236 x H152)

CHROME ABS
GLOFPCH
£72.00

MATT BLACK ABS
GLOFPBL
£72.00

Modena Linear Flush Plates (W236 x H152)

CHROME ABS
LINFPCH
£72.00

WHITE ABS
LINFPWH
£55.00

BRUSHED BRASS SS
LINFPBB
£218.00

MATT BLACK ABS
LINFPBL
£72.00

BENKÉ

Optional Square Buttons

CHROME	BRUSHED BRASS	MATT BLACK
FACCHPB	*FACBBPB*	*FACMBPB*
£33.00	**£47.00**	**£47.00**

Cathkin Concealed Cistern

- Cistern features water-saving dual flushes, with access from top or front
- Comes with chrome push button flush
- Optional Chrome, Matt Black, Brushed Brass and Brushed Nickel buttons available to purchase separately

H300 x W340 x D144mm

820MM *ACC001N*

£83.00

Optional Round Buttons

BRUSHED NICKEL	*USW0418*
MATT BLACK	*USW0416*
BRUSHED BRASS	*USW0417*
	£30.00

Optional Flush Plates

CHROME	MATT BLACK
ACC-FPC	*ACC-FPB*
£75.00	**£75.00**

Pneumatic Concealed Cistern

- Cistern features water-saving dual flushes, with access from top or front
- Supplied with polystyrene jacket to reduce condensation
- Comes with round chrome push button flush
- Chrome, Matt Black and Brushed Brass Flush Plates available to purchase separately

H310 x W335 x D153mm

820MM *CIST001*

£120.00

Optional Flush Plates

CHROME	BRUSHED BRASS	MATT BLACK
CISTFBCH	*CISTFBBR*	*CISTFBMB*
£75.00	**£75.00**	**£75.00**

Geberit

Geberit
AquaClean Alba
Shower Toilet

NEW

Fully Shrouded Back-to-Wall

Fully shrouded back-to-wall, close coupled WC, Rimfree® Washdown fully shrouded toilet pan, multidirectional outlet, hidden fastening

503.107.00.1 **£660.00**

Wall-Mounted Rimfree®

Wall-Mounted Rimfree® WC, fully shrouded toilet, 6/4 litre, with hidden fastening, soft close quick release WC seat

500.683.00.2 **£590.40**

Wall-Mounted Rimfree®

Wall-Mounted Rimfree® WC, washdown short projection toilet, 6/4 litre, hidden fastening

500.379.01.1 **£470.41**

Please note: Seat not included.

Floor Standing Back-to-Wall

Floor standing back-to-wall Rimfree® WC, washdown toilet, 6/4 litre with hidden fastening

500.840.00.1 **£456.71**

Please note: Seat not included.

Soft Close Quick Release

Soft close quick release, slim seat

500.687.01.1 **£245.18**

Soft Close Quick Release

Soft close quick release, slim sandwich seat

500.688.01.1 **£229.14**

Soft Close

Soft close slim seat

500.237.01.1 **£211.44**

Geberit
Smyle Square
Wall-Mounted WC

Wall-Mounted Rimfree®

Wall-Mounted Rimfree® WC, fully shrouded toilet, 6/4 litre, with soft close quick release WC seat

501.664.00.1 **£703.43**

Wall-Mounted Rimfree®

Wall-Mounted Rimfree® WC, fully shrouded, short projection toilet, 6/4 litre, with soft close quick release WC seat

502.381.00.1 **£766.32**

GEBERIT

Premium Wall-Mounted Rimfree®

Premium wall-Mounted Rimfree® fully shrouded toilet with hidden fastening, 6/4 litre, soft close quick release seat

502.793.00.1 **£486.67**

Premium Floor-Standing Rimfree®

Premium floor-standing Rimfree® fully shrouded toilet with hidden fastening, 6/4 litre, soft close quick release seat

502.794.00.1 **£512.63**

Wall-Mounted TurboFlush

Wall-Mounted TurboFlush toilet with quick release lockable seat

502.718.00.1 **£741.60**

Geberit Acanto
Wall-Mounted WC

Wall-Mounted TurboFlush

Wall-Mounted TurboFlush, shrouded toilet with WC seat design cover

500.201.01.1 **£834.30**

Geberit ONE
Wall-Mounted WC

NEW

Sigma Wall-Mounted

Geberit Duofix 112cm frame, with Sigma 12cm concealed cistern, Sigma01 flush plate and Smyle Rimfree® wall-Mounted WC

118.349.21.2 **£993.90**

Replaces previous article number 118.349.21.1

NEW

Alpha Wall-Mounted

Geberit Duofix set of element for wall-Mounted WC, 112cm, with Alpha concealed cistern 12cm, 6/3 litres, Alpha01 bright chrome-plated round flush plate and Selnova wall-Mounted WC, Rimfree®

118.362.21.2 **£672.91**

NEW

Alpha Back-to-Wall

Geberit Alpha set of concealed cistern 12cm, 6/3 litre, installation height 109cm, with Alpha01 bright chrome-plated flush plate and Selnova floor-standing WC, back-to-wall, Rimfree®

118.363.21.2 **£588.82**

GEBERIT

A SIMPLE **BATHROOM BUNDLE**

DESIGN MEETS FUNCTION

Our exclusive Sigma bundle pack contains everything you need for a wall-hung WC, including the Geberit Smyle Square Rimfree® WC, Sigma Duofix frame and the Sigma01 flush plate in a chrome plated finish. Geberit's Rimfree® WCs set the benchmark for modern bathrooms with both outstanding hygiene and an attractive design, the Duofix frame is the smart way to install sleek modern looking wall-hung toilets and the stylish Sigma01 flush plate delivers a water-saving dual flush.

Find out more at **geberit.co.uk/a-simple-bathroom-bundle**

NEW

Geberit Duofix toilet frame with Sigma cistern 12cm

Includes drainage and brackets, 112cm

	111.383.00.6	**£536.44**

Includes drainage and brackets, 112cm

	*111.383.00.3**	**£536.44**

*Whilst stocks last. Replaced by article number 111.383.00.6

NEW

Geberit Duofix toilet frame with Sigma cistern 12cm

Installation height 98cm

	111.911.00.6	**£488.76**

Installation height 98cm

	*111.911.00.3**	**£488.76**

*Whilst stocks last. Replaced by article number 111.911.00.6

NEW

Geberit Duofix toilet frame with Sigma cistern 8cm

Installation height 114cm

	111.799.00.6	**£636.08**

Installation height 114cm

	*111.799.00.3**	**£636.08**

*Whilst stocks last. Replaced by article number 111.911.00.6

NEW

Geberit Sigma concealed cistern 8cm, 6/3 litres

8cm cistern, installation height 1200mm

	109.792.00.1	**£315.12**

8cm cistern, installation height 1200mm

	*109.772.00.1**	**£315.12**

*Whilst stocks last. Replaced by article number 109.792.00.1

NEW

Geberit Sigma concealed cistern, 6/3 litres

12cm cistern, installation height 108cm

	109.309.00.5	**£246.73**

12cm cistern, installation height 108cm

	*109.309.00.1**	**£246.73**

*Whilst stocks last. Replaced by article number 109.309.00.5

NEW

Geberit Duofix toilet frame with Omega cistern 12cm

Installation height 82cm

	111.004.00.4	**£545.08**

Installation height 82cm

	*111.004.00.3**	**£545.08**

*Whilst stocks last. Replaced by article number 111.004.00.4

Geberit Omega concealed cistern 12cm, 6/3 litres

Installation height 82cm

	109.041.00.1	**£351.56**

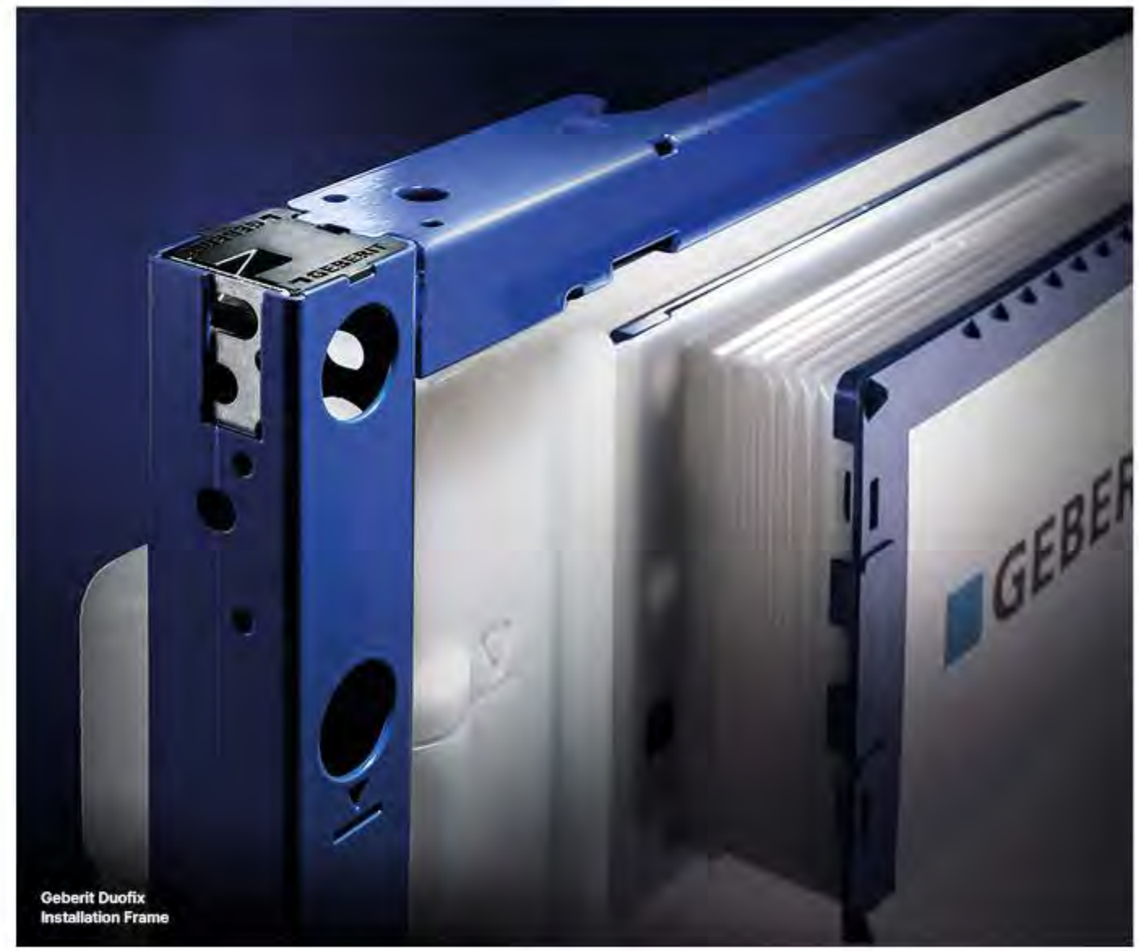

Geberit Duofix
Installation Frame

NEW

Geberit Alpha concealed cistern 12cm, 6/3 litres

Installation height 82cm

109.002.00.1 **£147.41**

Replaces previous article number - 109.205.00.1

NEW

Geberit Alpha concealed cistern 12cm, 6/3 litres

Installation height 109cm

109.012.00.1 **£147.41**

Replaces previous article number - 109.105.00.1

NEW

Geberit Alpha concealed cistern 12cm, 6/3 litres, installation height 109cm with round flush plate

Alpha01 round flush plate bright chrome-plated

109.014.21.1 **£214.30**

Replaces previous article number - 109.103.21.2

NEW

Geberit Alpha concealed cistern 12cm, 6/3 litres, installation height 109cm with square flush plate

Alpha01 square flush plate bright chrome-plated

109.013.21.1 **£214.30**

Replaces previous article number - 109.104.21.2

NEW

Geberit Alpha concealed cistern 12cm, 6/3 litres, installation height 82cm with round flush plate

Alpha01 flush plate, round, bright chrome-plated

109.004.21.1 **£214.30**

Added addition (now includes flush plate) to previous article number - 109.205.00.1

NEW

Geberit Alpha concealed cistern 12cm, 6/3 litres, installation height 82cm with square flush plate

Alpha01 flush plate, square, bright chrome-plated

109.003.21.1 **£214.30**

Added addition (now includes flush plate) to previous article number - 109.205.00.1

NEW

Geberit Duofix element for wall-Mounted WC, with Alpha concealed cistern 12cm, 6/3 litres

Installation height 82cm

458.033.00.2 **£288.40**

Replaces previous article number - 111.260.00.3

NEW

Geberit Duofix element for wall-Mounted WC, with Alpha concealed cistern 12cm, 6/3 litres

Installation height 98cm

458.036.00.2 **£288.40**

Replaces previous article number - 458.145.00.1

NEW

Geberit Duofix element for wall-Mounted WC, with Alpha concealed cistern 12cm, 6/3 litres

Installation height 112cm

458.039.00.2 **£288.40**

Replaces previous article number - 458.132.00.1

NEW

Geberit Duofix element for wall-Mounted WC, 82cm, with Alpha concealed cistern 12cm, 6/3 litres, with round flush plate

Alpha01 flush plate, round, bright chrome-plated

458.035.21.2 **£344.09**

Added addition (now includes flush plate) to previous article number - 111.260.00.3

NEW

Geberit Duofix element for wall-Mounted WC, 82cm, with Alpha concealed cistern 12cm, 6/3 litres with square flush plate

10 Alpha01 flush plate, square, bright chrome-plated

458.034.21.2 **£344.09**

Added addition (now includes flush plate) to previous article number - 111.260.00.3

NEW

Geberit Duofix element for wall-Mounted WC, 98cm, with Alpha concealed cistern 12cm, 6/3 litres with round flush plate

10 Alpha01 flush plate, round, bright chrome-plated

458.038.21.2 **£344.09**

Replaces previous article number - 458.151.21.1

NEW

Geberit Duofix element for wall-Mounted WC, 98cm, with Alpha concealed cistern 12cm, 6/3 litres with square flush plate

10 Alpha01 flush plate, square, bright chrome-plated

458.037.21.2 **£344.09**

Replaces previous article number - 458.152.21.1

NEW

Geberit Duofix element for wall-Mounted WC, 112cm, with Alpha concealed cistern 12cm, 6/3 litres with round flush plate

10 Alpha01 flush plate, round, bright chrome-plated

458.041.21.2 **£344.09**

Replaces previous article number - 458.118.21.2

NEW

Geberit Duofix element for wall-Mounted WC, 112cm, with Alpha concealed cistern 12cm, 6/3 litres with square flush plate

10 Alpha01 flush plate, square, bright chrome-plated

458.040.21.2 **£344.09**

Replaces previous article number - 458.119.21.2

NEW

Geberit Duofix frame for wall-Mounted toilet, 79cm, with low-height cistern

10 Duofix element for wall-Mounted WC, 79cm, with low-height cistern

111.207.00.3 **£458.17**

Duofix element for wall-Mounted WC, 79cm, with low-height cistern

*111.207.00.2** **£458.17**

*Whilst stocks last. Replaced by article number 111.207.00.3

NEW

Geberit low-height cistern, 6/3 litres, pneumatic flush actuation for single or dual flush button

10 Installation height 79cm

109.721.00.2 **£81.85**

Installation height 79cm

*109.721.00.1** **£81.85**

*Whilst stocks last. Replaced by article number 109.721.00.2

NEW

Geberit low-height concealed cistern, 6/3 litres with remote flush plate type 01

10 Gloss chrome-plated

109.724.21.2 **£199.04**

Gloss chrome-plated

109.724.21.1 **£199.04**

*Whilst stocks last. Replaced by article number 109.724.21.2

Can't find what you are looking for?

Scan the QR code to download the latest Geberit brochure and discover more exciting products and options.

GEBERIT

NEW

GEBERIT DUOFIX ALPHA INSTALLATION SYSTEMS

BE MORE ALPHA
CHOOSE AFFORDABILITY

Affordability. Quality. Simplicity.

The brand you know and trust for delivering quality, reliable and efficient sanitary product - but now at an affordable price, with a simplified range and enhanced flush plate colour choices to suit all.

NEW FOR 2025

Find out more at
geberit.co.uk/alpha

GEBERIT

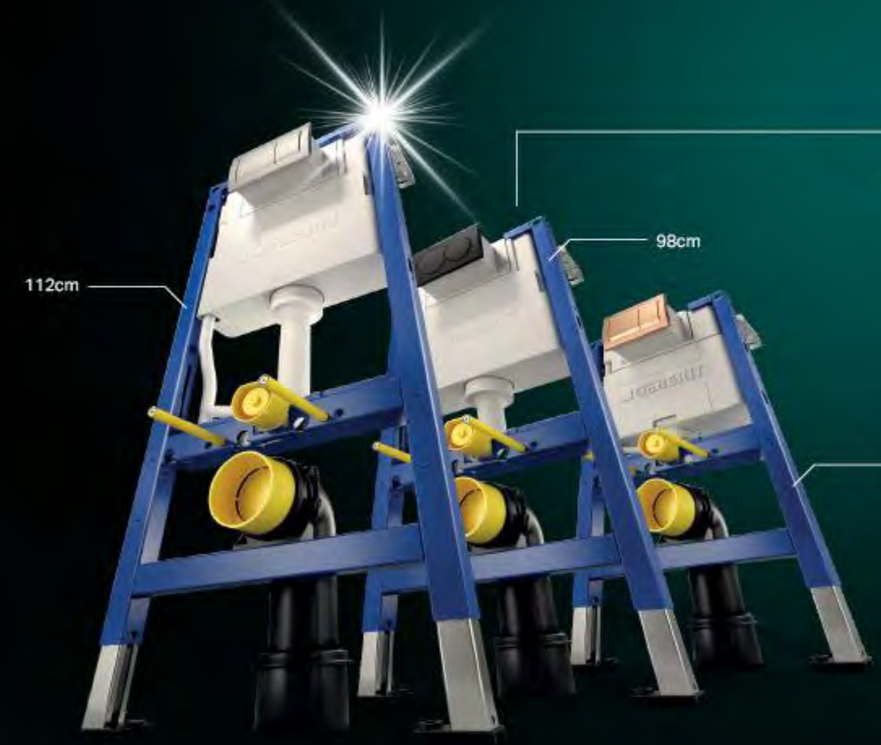

Sigma01 Round

Geberit Sigma01 flush plate for dual flush: gloss chrome-plated

115.770.21.5 **£100.49**

Geberit Sigma01 flush plate for dual flush: matt chrome / easy-to-clean coated

115.770.JQ.5 **£96.76**

Geberit Sigma01 flush plate for dual flush: black

115.770.DW.5 **£104.22**

NEW

Sigma01 Square

Geberit Sigma01 flush plate for dual flush: matt chrome / easy to clean coated

115.660.JQ.1 **£117.60**

Geberit Sigma01 flush plate for dual flush: black / easy to clean coated

115.660.DW.1 **£102.00**

Geberit Sigma01 flush plate for dual flush: white / easy to clean coated

115.660.11.1 **£87.60**

Geberit Sigma01 flush plate for dual flush: gloss chrome plated / easy to clean coated

115.660.21.1 **£117.60**

Sigma20 Round

Geberit Sigma20 flush plate for dual flush: Plate and buttons: gloss chrome-plated, Design rings: matt chrome-plated

115.882.KH.1 **£162.55**

Geberit Sigma20 flush plate for dual flush: Plate and buttons: matt chrome-coated, easy-to-clean coated, Design rings: gloss chrome-plated

115.882.JQ.1 **£147.61**

Geberit Sigma20 flush plate for dual flush: Plate and buttons: black matt coated, easy-to-clean coated, Design rings: black

115.882.16.1 **£203.86**

Sigma20 Square (Ex Sigma30)

Geberit Sigma20 flush plate for dual flush: Plate and buttons: gloss chrome-plated, Design stripes: matt chrome-plated

115.883.KH.1 **£172.14**

Geberit Sigma20 flush plate for dual flush: Plate and buttons: matt chrome-coated, easy-to-clean coated, Design stripes: gloss chrome-plated

115.883.JQ.1 **£147.61**

Geberit Sigma20 flush plate for dual flush: Plate and buttons: black matt coated, easy-to-clean coated, Design stripes: black

115.883.16.1 **£226.49**

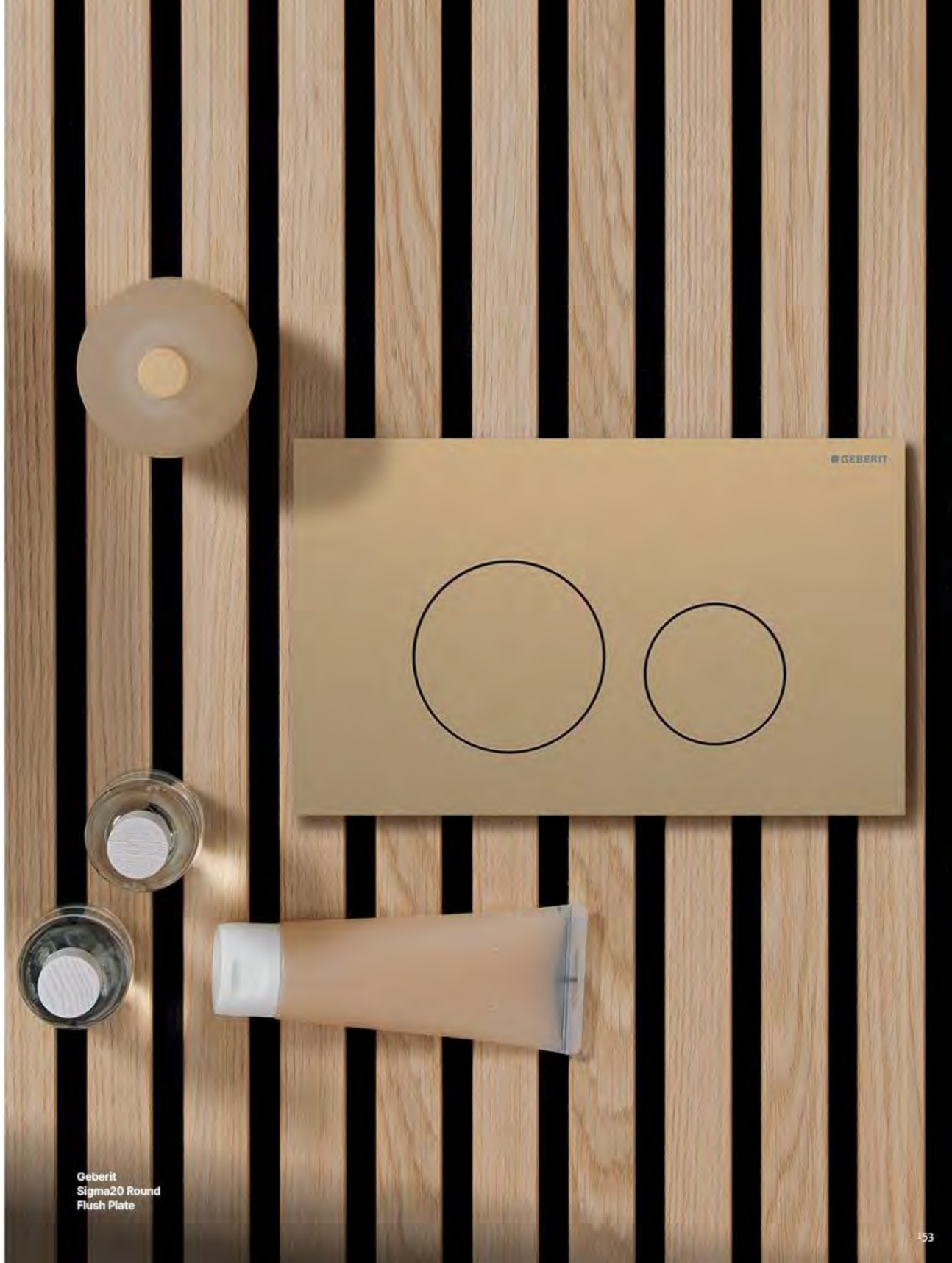

Geberit
Sigma20 Round
Flush Plate

NEW Sigma40 Round

Geberit Sigma40 dual flush plate, Glass white	115.628.SI.1	£290.40
Geberit Sigma40 dual flush plate, Glass black	115.628.SJ.1	£290.40
Geberit Sigma40 dual flush plate, Glass lava	115.628.JK.1	£290.40
Geberit Sigma40 dual flush plate, Glass sand grey	115.628.JL.1	£290.40
Geberit Sigma40 dual flush plate, Stainless steel	115.628.FW.1	£378.00
Geberit Sigma40 dual flush plate, Stainless steel red gold	115.628.QB.1	£516.00
Geberit Sigma40 dual flush plate, Stainless steel black chrome	115.628.QD.1	£516.00
Geberit Sigma40 dual flush plate, Stainless steel brass	115.628.QF.1	£516.00
Geberit Sigma40 dual flush plate, Stainless steel white painted	115.628.JT.1	£378.00
Geberit Sigma40 dual flush plate, Stainless steel black painted	115.628.14.1	£378.00

NEW Sigma40 Square

Geberit Sigma40 dual flush plate, Glass white	115.629.SI.1	£318.00
Geberit Sigma40 dual flush plate, Glass black	115.629.SJ.1	£318.00
Geberit Sigma40 dual flush plate, Glass lava	115.629.JK.1	£318.00
Geberit Sigma40 dual flush plate, Glass sand grey	115.629.JL.1	£318.00
Geberit Sigma40 dual flush plate, Stainless steel	115.629.FW.1	£405.60
Geberit Sigma40 dual flush plate, Stainless steel red gold	115.629.QB.1	£549.60
Geberit Sigma40 dual flush plate, Stainless steel black chrome	115.629.QD.1	£549.60
Geberit Sigma40 dual flush plate, Stainless steel brass	115.629.QF.1	£549.60
Geberit Sigma40 dual flush plate, Stainless steel white painted	115.629.JT.1	£405.60
Geberit Sigma40 dual flush plate, Stainless steel black painted	115.629.14.1	£405.60

Sigma50 Square

Geberit Sigma50 flush plate for dual flush, metal colour chrome-plated: Base plate and buttons: chrome-plated, Cover plate: white	115.788.11.2	£313.42
Geberit Sigma50 flush plate for dual flush, metal colour chrome-plated: Base plate and buttons: chrome-plated, Cover plate: black	115.788.DW.2	£313.42
Geberit Sigma50 flush plate for dual flush, metal colour chrome-plated: Base plate and buttons: chrome-plated, Cover plate: smoked glass reflective	115.788.SD.2	£389.21

Omega20 Round

Geberit Omega20 flush plate for dual flush: Plate and buttons: gloss chrome-plated, Design rings: matt chrome-plated	115.085.KH.1	£195.07
Geberit Omega20 flush plate for dual flush: Plate and buttons: matt chrome-coated, easy-to-clean coated, Design rings: gloss chrome-plated	115.085.JQ.1	£195.07

Omega20 Square (Ex Omega30)

Geberit Omega20 flush plate for dual flush: Plate and buttons: gloss chrome-plated, Design stripes: matt chrome-plated	115.080.KH.1	£175.58
Geberit Omega20 flush plate for dual flush: Plate and buttons: matt chrome-coated, easy-to-clean coated, Design stripes: gloss chrome-plated	115.080.JQ.1	£175.58

GEBERIT

To view further Geberit information, please scan the QR code.

NEW

Alpha01 Round

Geberit Alpha01dual flush plate, Stainless steel. White	115.035.11.1	£55.20
Geberit Alpha01dual flush plate, Stainless steel. Bright chrome-plated	115.035.21.1	£80.40
Geberit Alpha01dual flush plate, Stainless steel. Matt chrome-plated	115.035.46.1	£80.40
Geberit Alpha01dual flush plate, Stainless steel. Red gold	115.035.QA.1	£80.40
Geberit Alpha01dual flush plate, Stainless steel. Black chrome	115.035.QC.1	£80.40
Geberit Alpha01dual flush plate, Stainless steel. Brass-coloured	115.035.QE.1	£80.40
Geberit Alpha01dual flush plate, Stainless steel. Black matt	115.035.14.1	£80.40

NEW

Alpha01 Square

Geberit Alpha01dual flush plate, Stainless steel. White	115.055.11.1	£60.00
Geberit Alpha01dual flush plate, Stainless steel. Bright chrome-plated	115.055.21.1	£86.40
Geberit Alpha01dual flush plate, Stainless steel. Matt chrome-plated	115.055.46.1	£86.40
Geberit Alpha01dual flush plate, Stainless steel. Red gold	115.055.QA.1	£86.40
Geberit Alpha01dual flush plate, Stainless steel. Black chrome	115.055.QC.1	£86.40
Geberit Alpha01dual flush plate, Stainless steel. Brass-coloured	115.055.QE.1	£86.40
Geberit Alpha01dual flush plate, Stainless steel. Black matt	115.055.14.1	£86.40

Type 01

Geberit Type 01 remote flush actuation, pneumatic, for dual flush, furniture actuator: gloss chrome-plated	116.050.21.1	£117.19
Geberit Type 01 remote flush actuation, pneumatic, for dual flush, concealed actuator: gloss chrome-plated	116.042.21.1	£117.19

Geberit Alpha
Flush Plates

GEBERIT AQUACLEAN SHOWER TOILETS

WHIRLSPRAY SHOWER TECHNOLOGY
With an additional shower spray, the gentle lady shower ensures personal hygiene using pure water.

TURBOFLUSH
Optimised with Turbo Flush for a perfect wash-out of Geberit toilet ceramics, with water-saving flushing.

REMOTE CONTROL
The intuitive remote provides hand-held control and the touch of a button is all it takes to call up personal settings.

www.geberit-aquaclean.com/comfort

Mera Comfort

Geberit AquaClean Mera Comfort WC complete solution, wall-Mounted WC: WC ceramic appliance: white / KeraTect, Design cover: white
146.210.11.1 **£7312.60**

Geberit AquaClean Mera Comfort WC complete solution, wall-Mounted WC: WC ceramic appliance: white / KeraTect, Design cover: gloss chrome-plated
146.210.21.1 **£7405.20**

Mera Classic

Geberit AquaClean Mera Classic WC complete solution, wall-Mounted WC: WC ceramic appliance: white / KeraTect, Design cover: white
146.200.11.1 **£5501.50**

Geberit AquaClean Mera Classic WC complete solution, wall-Mounted WC: WC ceramic appliance: white / KeraTect, Design cover: gloss chrome-plated
146.200.21.1 **£5588.80**

Sela

Geberit AquaClean Sela WC complete solution, wall-Mounted WC: WC ceramic appliance: white / KeraTect, Design cover: gloss chrome-plated
146.220.21.1 **£4050.40**

Tuma

Geberit AquaClean Tuma Comfort WC complete solution, wall-Mounted WC: WC ceramic appliance: white / KeraTect, Design cover: white
146.290.11.1 **£3405.70**

Alba

Geberit AquaClean Alba WC complete solution, wall-Mounted WC: WC ceramic appliance: white / KeraTect, Design cover: white
146.350.01.1 **£1320.00**

Geberit
AquaClean Alba
Shower Toilet

Basins

Island Countertop Basins

SOFT SQUARE W400 x D400mm	SOFT RECTANGLE W500 x D400mm	SOFT RECTANGLE W800 x D400mm
CTB-ISL400	*CTB-ISL500*	*CTB-ISL800*
£134.00	**£160.00**	**£168.00**

Match with High Rise Mono Basin Mixers
FROM PAGE 242

Countertop Basins

ROUND W360mm	EGG W440 x D355mm	GROOVE W360mm	MOON W440mm
29031	*29030*	*06446*	*29023*
£209.00	**£209.00**	**£149.00**	**£314.00**

Lois Countertop Basins

ROUND W425mm	SQUARE W390 x D390mm
CTB-LOI425	*CTB-LOI390*
£120.00	**£120.00**

Karlo 1 Tap Hole Countertop Basins

ROUND W460mm	RECTANGLE W500 x D400mm
CTB-KAR460	*CTB-KAR500*
£108.00	**£168.00**

Pebble Countertop Basin

Match with High Rise Mono Basin Mixers
FROM PAGE 242

W490x D320mm
NBV168
£171.00

Matt Black Countertop Basins

ROUND W350mm	RECTANGLE W455 x D325mm
NBV462	*NBV458*
£317.00	**£317.00**

Overflow Rings

GUNMETAL	MATT BLACK	BRUSHED BRASS
OVRGM	*OVRBL*	*OVRBB*
£13.00	**£13.00**	**£13.00**

Universal Basin Wastes

CHROME	MATT BLACK	BRUSHED BRASS
UNIWASCH	*UNIWASBL*	*UNIWASBB*
£38.00	**£43.00**	**£49.00**

Gunmetal Basin Wastes

SLOTTED	UNSLOTTED
SLWASGM	*UNSLWASGM*
£38.00	**£38.00**

Moon Basin

Groove Basin

Skål

NEW

Round Polymarble Basin Dia400 x H150mm

MATT WHITE	MATT BLACK	CASHMERE PINK MATT	MORNING SKY BLUE MATT	OCEAN BLUE MATT	NIGHT SKY BLUE MATT	CORAL GREEN MATT	KHAKI MATT	ARCTIC GREY MATT	MIDNIGHT GREY MATT
UF0421	*UF1246*	*UF0580*	*UF0581*	*UF0424*	*UF0425*	*UF1247*	*UF0423*	*UF0422*	*UF0426*
£315.00	**£415.00**	**£415.00**	**£415.00**	**£415.00**	**£415.00**	**£415.00**	**£415.00**	**£415.00**	**£415.00**

NEW

Oval Polymarble Basin W600 x D350 x H120mm

MATT WHITE	MATT BLACK	CASHMERE PINK MATT	MORNING SKY BLUE MATT	OCEAN BLUE MATT	NIGHT SKY BLUE MATT	CORAL GREEN MATT	KHAKI MATT	ARCTIC GREY MATT	MIDNIGHT GREY MATT
UF0427	*UF1244*	*UF0582*	*UF0583*	*UF0430*	*UF0431*	*UF1245*	*UF0429*	*UF0428*	*UF0432*
£415.00	**£515.00**	**£515.00**	**£515.00**	**£515.00**	**£515.00**	**£515.00**	**£515.00**	**£515.00**	**£515.00**

NEW

Rectangle Polymarble Basin W600 x D400 x H120mm

MATT WHITE	MATT BLACK	CASHMERE PINK MATT	MORNING SKY BLUE MATT	OCEAN BLUE MATT	NIGHT SKY BLUE MATT	CORAL GREEN MATT	KHAKI MATT	ARCTIC GREY MATT	MIDNIGHT GREY MATT
UF0433	*UF1248*	*UF0584*	*UF0585*	*UF0436*	*UF0437*	*UF1249*	*UF0435*	*UF0434*	*UF0438*
£435.00	**£535.00**	**£535.00**	**£535.00**	**£535.00**	**£535.00**	**£535.00**	**£535.00**	**£535.00**	**£535.00**

SKÅL Oval Basin
Ocean Blue Matt

SKÅL Rectangle Basin
Midnight Grey Matt

SKÅL Round Basin
Khaki Matt

BATHING

BENKÉ

Haddington

Haddington Freestanding Bath

- Encapsulated baseboard for greater strength and insulation
- Made from 100% acrylic sheet, reinforced with high-quality resin & fibreglass
- Can be fitted against wall with bath filler
- Easy to clean
- Easy maintenance
- Scratch and stain resistant
- High gloss finish

L1500 x W750mm (220c/l)	L1700 x W750mm (230c/l)
KB1575HAD	*KB1775HAD*
£1528.00	**£1584.00**

BENKÉ

Muirfield

Muirfield Freestanding Bath

- Encapsulated baseboard for greater strength and insulation
- Made from 100% acrylic sheet, reinforced with high-quality resin & fibreglass
- Easy to clean
- Easy maintenance
- Scratch and stain resistant
- High gloss finish

L1700 x W800mm (240c/l)
KB1780MUI
£1584.00

BENKÉ

Fidra

Fidra Freestanding Bath

- Encapsulated baseboard for greater strength and insulation
- Made from 100% acrylic sheet, reinforced with high-quality resin & fibreglass
- Easy to clean
- Easy maintenance
- Scratch and stain resistant
- High gloss finish

L1500 x W750mm (200c/l)	L1700 xW750mm (210c/l)	L1700 x W800mm (220c/l)
KB1575FID	*KB1675FID*	*KB1780FID*
£1528.00	**£1556.00**	**£1584.00**

BENKÉ

Gullane

Gullane Freestanding Bath

- Encapsulated baseboard for greater strength and insulation
- Made from 100% acrylic sheet, reinforced with high-quality resin & fibreglass
- Easy to clean
- Easy maintenance
- Scratch and stain resistant
- High gloss finish

L1700 x W800mm (240c/l)
KB1780GUL
£1448.00

BENKÉ

Dunbar

Dunbar Freestanding Bath

- Encapsulated baseboard for greater strength and insulation
- Made from 100% acrylic sheet, reinforced with high-quality resin & fibreglass
- Easy to clean
- Easy maintenance
- Scratch and stain resistant
- High gloss finish

L1500 x W730mm (210c/l)	L1700 x W800mm (230c/l)
KB1575DUN	*KB1780DUN*
£1475.00	**£1528.00**

BENKÉ

Tantallon

Tantallon Freestanding Bath

- Encapsulated baseboard for greater strength and insulation
- Made from 100% acrylic sheet, reinforced with high-quality resin & fibreglass
- Easy to clean
- Easy maintenance
- Scratch and stain resistant
- High gloss finish

L1500 x W750mm (200c/l)	L1700 x W800mm (235c/l)
KB1575TAN	*KB1780TAN*
£1423.00	**£1475.00**

Marine

Left hand bath

Open Back for Easy Installation

Right Hand Bath

Marine Freestanding Bath

- Encapsulated baseboard for greater strength and insulation
- Made from 100% acrylic sheet, reinforced with high-quality resin & fibreglass
- Open back for easy installation
- Easy to clean
- Easy maintenance
- Scratch and stain resistant
- High gloss finish

	L1500 x W750mm (220c/l)	L1700 x W800mm (240 c/l)
L EFT HAND	*KB15MARLH*	*KB17MARLH*
RIGHT HAND	*KB15MARRH*	*KB17MARLH*
	£1528.00	**£1584.00**

Right Hand Bath

Optional Waste & Overflow*

MATT WHITE	MATT BLACK	BRUSHED BRASS
FREEWASWH	*FREEWASMB*	*FREEWASBB*
£109.00	**£109.00**	**£109.00**

*All freestanding baths come with chrome waste and overflow as standard. Optional finishes available are compatible with all freestanding baths.

Right Hand Bath

Cast Marble & Solid Surface Baths

Choose a Cast Marble or Solid Surface bath for the ultimate in style and luxury. All baths come as standard in a stunning Matt White finish.

Looking for something a bit bolder. No problem! You can customise your bath with any RAL colour (including the waste). Cast Marble are full colour (outside and inside) while Solid Surface baths are dual colour (the inner bath remains Matt White).

Cast Marble is durable, resembles natural marble and can be customised with a full colour finish

Solid Surface is highly durable and more resistant to scratches and can be customised with a dual colour finish

Customise your bath with any RAL colour (14 day lead time)

NEW

Solo

	L1350 x W740mm	
CAST MARBLE	*IQBC1374WHM15*	**£2899.00**
SOLID SURFACE	*IQBS1374WHM15*	**£3199.00**

CUSTOMCOLOUR

FULL COLOUR (CAST MARBLE ONLY)	*IQBFCOLOUR*
DUAL COLOUR (SOLID SURFACE ONLY)	*IQBDCOLOUR*
	£1000.00

Havana Corner

	Corner (LH)	Corner (RH)
	L1700 x W800mm	L1700 x W800mm
CAST MARBLE	*IQBC1780WHM93*	*IQBC1780WHM92*
	£3499.00	**£3499.00**
SOLID SURFACE	*IQBS1780WHM93*	*IQBS1780WHM92*
	£3799.00	**£3799.00**

CUSTOMCOLOUR

FULL COLOUR (CAST MARBLE ONLY)	*IQBFCOLOUR*
DUAL COLOUR (SOLID SURFACE ONLY)	*IQBDCOLOUR*
	£1000.00

Right Hand Corner Bath

NEW

NEW

Havana BTW

	L1700 x W800mm
CAST MARBLE	*IQBC1780WHM91*
	£3399.00
SOLID SURFACE	*IQBS1780WHM91*
	£3699.00

iconiq bathrooms

CUSTOMCOLOUR

FULL COLOUR (CAST MARBLE ONLY)	*IQBFCOLOUR*
DUAL COLOUR (SOLID SURFACE ONLY)	*IQBDCOLOUR*
	£1000.00

NEW

New Nirvana

	L1700 x W950mm
CAST MARBLE	*IQBC1795WHM81*
	£3199.00
SOLID SURFACE	*IQBS1795WHM81*
	£3499.00

NEW

Oasis

	L1650 x W800mm
CAST MARBLE	*IQBC1680WHM51*
	£3199.00
SOLID SURFACE	*IQBS1680WHM51*
	£3499.00

NEW

U2

	L1650 x W850mm
CAST MARBLE	*IQBC1685WHM31*
	£2899.00
SOLID SURFACE	*IQBS1685WHM31*
	£3199.00

NEW

Rio

	L1700 x W800mm
CAST MARBLE	*IQBC1780WHM22*
	£2999.00
SOLID SURFACE	*IQBS1780WHM22*
	£3299.00

iconiq bathrooms

CUSTOM**COLOUR**

FULL COLOUR (CAST MARBLE ONLY)	*IQBFCOLOUR*
DUAL COLOUR (SOLID SURFACE ONLY)	*IQBDCOLOUR*
	£1000.00

Matt White Bath Wastes are included and are also fully colour-customisable

NEW

Ica

	L1700 x W800mm
CAST MARBLE	*IQBC1780WHM21*
	£3199.00
SOLID SURFACE	*IQBS1780WHM21*
	£3499.00

iconiq bathrooms

CUSTOM**COLOUR**

FULL COLOUR (CAST MARBLE ONLY)	*IQBFCOLOUR*
DUAL COLOUR (SOLID SURFACE ONLY)	*IQBDCOLOUR*
	£1000.00

NEW

Cusco

	L1550 x W750mm	L1600 x W800mm	L1640 x W830mm	L1600 x W700mm	L1780 x W850mm
CAST MARBLE	*IQBC1575WHM51*	*IQBC1680WHM51*	*IQBC1683WHM51*	*IQBC1670WHM51*	*IQBC1785WHM51*
	£2599.00	**£2799.00**	**£2899.00**	**£3199.00**	**£3199.00**
SOLID SURFACE	*IQBS1575WHM51*	*IQBS1680WHM51*	*IQBS1683WHM51*	*IQBS1670WHM51*	*IQBS1785WHM51*
	£2999.00	**£3099.00**	**£3199.00**	**£3499.00**	**£3499.00**

Basins & Stools

Compliment your Cast Marble or Solid Surface bath with a matching Basin & Stool. These can be colour matched to the same colour as your bath.

Scan the QR code for details and technical information on the full Iconiq range.

Ocean

Surf Round Single Ended Bath

W1700 x D700mm (147c/l)
SUR17S
£297.00

Surf Round Double Ended Bath

W1700 x D700mm (170c/l)
SUR17D
£353.00

Flow Square Single Ended Bath

W1700 x D700mm (178c/l)	W1700 x D750mm (193c/l)
FLO70S	*FLO75S*
£301.00	**£371.00**

Flow Square Double Ended Bath

W1700 x D700mm (161c/l)	W1700 x D750mm (179c/l)
FLO70D	*FLO75D*
£353.00	**£415.00**

Click Bath Wastes

CHROME	*WAS015*	**£46.00**
BLACK	*WAS019*	**£70.00**
BRUSHED BRASS	*WAS020*	**£109.00**

Pop Up Bath Wastes

CHROME	*WAS012*	**£46.00**
MATT BLACK	*WASPOPMB*	**£109.00**
GUNMETAL	*WASPOPGM*	**£109.00**

NEW

Pop-Up Bath Waste (Easy-Clean)

BRUSHED NICKEL	*WAS026*	**£34.50**

Easy-Clean Waste

NEW

Pop-Up Bath Filler Waste (Easy-Clean)

CHROME	*WASPBFCH*	**£116.00**
MATT BLACK	*WASPBFMB*	**£133.00**
BRUSHED BRASS	*WASPBFBB*	**£152.00**

Easy-Clean Waste

Quantum

- Modern square and deep design.
- Provides elegant look & feel without compromising strength and comfort.
- Wide range of sizes across single and double ended variants.
- Unique Carronite finish provides increased rigidity and heat insulation for more comfortable bathing experience.

Quantum Single Ended 5mm Acrylic

L1600 x W700mm (213c/l)	L1700 x W700mm (228c\l)	L1700 x W750mm (240c/l)
02143	*02151*	*02147*
£448.00	**£448.00**	**£550.00**

Quantum Double Ended 5mm Acrylic

L1700 x W700mm (228c/l)	L1700mm x W750mm (240c/l)
02159	*02157*
£448.00	**£550.00**

Quantum Single Ended Carronite

L1600 x W700mm (213c/l)	L1700 x W700mm (228c/l)	L1700 x W750mm (240c/l)
02144	*02152*	*02148*
£758.00	**£758.00**	**£856.00**

Quantum Double Ended Carronite

L1700mm x W700mm (228c/l)	L1700mm x W750mm (240c/l)
02160	*02158*
£758.00	**£856.00**

Integra Double Ended

Profile

- Ultra slim edge for almost rimless design, perfect space-saver.
- Provides elegant look & feel without compromising strength and comfort.
- Wide range of sizes across single and double ended variants.
- Unique Carronite finish provides increased rigidity and heat insulation for more comfortable bathing experience.

Profile Single Ended 5mm Acrylic

L1700 x W700mm (218c/l)	L1700 x W750mm (257c/l)
02422	*02424*
£514.00	**£634.00**

Profile Double Ended 5mm Acrylic

L1600 x W700mm (188c/l)	L1650 x W700mm (200L)	L1700 x W700mm (205L)
02199	*02521*	*02191*
£514.00	**£514.00**	**£514.00**

Profile Single Ended Carronite

L1700 x W700mm (228c/l)	L1700 x W750mm (240c/l)
02423	*02425*
£854.00	**£992.00**

Profile Double Ended Carronite

L1600 x W700mm (188L)	L1650 x W700mm (200L)	L1700 x W700mm (205L)
02200	*02522*	*02192*
£854.00	**£854.00**	**£854.00**

Profile Single Ended

Integra

- Robust & stylish design.
- Sleek, unobtrusive handles to make bathing easier for those needing extra help getting in and out.
- Chrome hand grips supplied as standard, optional Anthracite grips available separately.
- Carronite finish provides increased rigidity and heat insulation for more comfortable bathing experience.

Integra Single Ended 5mm Acrylic

L1700 x W700mm (228c/l)	L1700 x W750mm (257c/l)
02169	*02171*
£514.00	**£628.00**

Integra Single Ended Carronite

L1700 x W700mm (228c/l)	L1700 x W750mm (240c/l)
02170	*02172*
£808.00	**£920.00**

INTEGRA

PROFILE DE

PROFILE SE

QUANTUM SE

QUANTUM DE

Scan these QR Codes for
Carron bath's technical information

Integra Anthracite Hand Grips

02549 **£72.00**

Can't find what you are looking for?

Scan the QR code and download the latest brochure to view the complete range of baths and sizes.

carron

BENKÉ

Elite

Towel Bar

Shower Screen Chrome (Left Hand Bath Shown)

Shower Screen Matt Black

Shower Screen Brushed Brass

Elite L Shaped Shower Bath

	W1500 x H520 x D850mm	W1600 x H520 x D850mm	W1700 x H520 x D850mm	W1800 x H520 x D850mm
LEFT HAND	*BAT140EL*	*BAT145EL*	*BAT150EL*	*BAT155EL*
RIGHT HAND	*BAT141EL*	*BAT146EL*	*BAT151EL*	*BAT156EL*
	£337.00	**£337.00**	**£337.00**	**£396.00**

Shower Bath Shower Screen

	W820 x H140mm (W845 inc. extension)		Bath Screen with Towel Bar	
CHROME	*KONLE*	**£258.00**	*KONLS*	**£285.00**
MATT BLACK	*NER-LS*	**£268.00**		
BRUSHED BRASS	*BRASS-LS*	**£288.00**		

Towel Bar & Brushed Brass Bath Screen Now Available

Shower Bath Front Panel

W1500 x H520mm	W1600 x H520mm	W1700 x H520mm	W1800 x H520mm
BAT142EL	*BAT147EL*	*BAT152EL*	*BAT157EL*
£116.00	**£116.00**	**£116.00**	**£128.00**

Shower Bath End Panel

W850 x H520mm
BAT170EO
£70.00

Acrylic Sonic Reinforced Bath Panels

FRONT W1700 x H520 x D30mm	FRONT W1800 x H520 x D30mm
BAT244SO	*BAT245SO*
£120.00	**£145.00**

END W700 x H520 x D30mm	END W800 x H520 x D30mm
BAT246SO	*BAT247SO*
£84.00	**£93.00**

Acrylic Supastyle Bath Panels

FRONT W1700 x H520 x D3mm	END W750 x H520 x D3mm
BAT212SU	*BAT214SU*
£61.00	**£39.00**

Mouldwood Gloss White Bath Panels

W1700 x D15mm (H500-550mm)	W1800 x D15mm (H500-550mm)	W700 x D15mm (H500-550mm)	W800 x D15mm (H500-550mm)
NEV1700FPGQ	*NEV1800FPGQ*	*NEV700FPGQ*	*NEV800FPGQ*
£166.00	**£182.00**	**£88.00**	**£95.00**

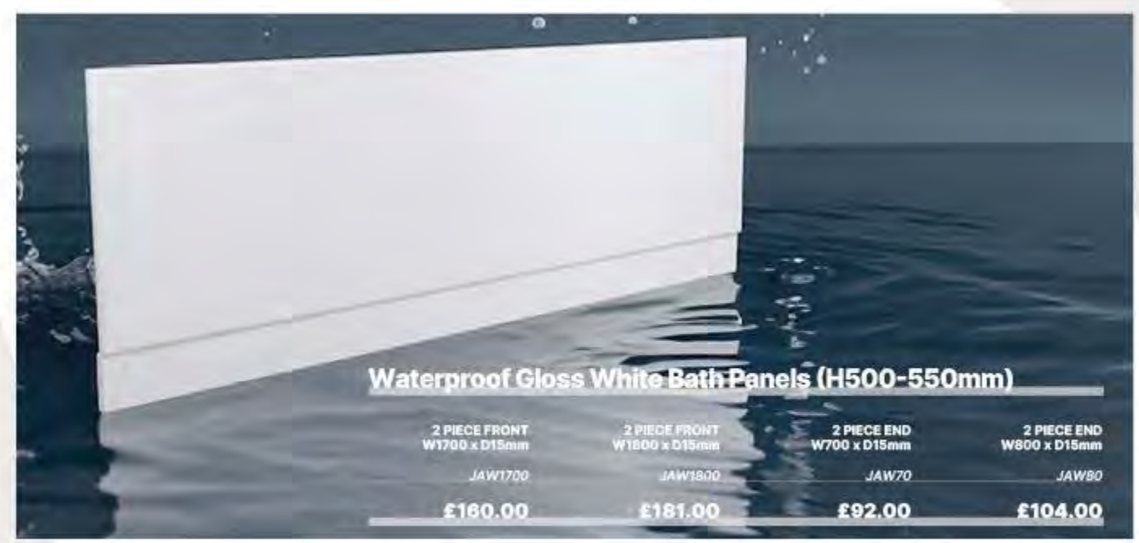

Waterproof Gloss White Bath Panels (H500-550mm)

2 PIECE FRONT W1700 x D15mm	2 PIECE FRONT W1800 x D15mm	2 PIECE END W700 x D15mm	2 PIECE END W800 x D15mm
JAW1700	*JAW1800*	*JAW70*	*JAW80*
£160.00	**£181.00**	**£92.00**	**£104.00**

Bath Shower Screens

- Minimalist single panel bath shower screens.
- Simple switch between bathing and showering.
- Available in Chrome, Matt Black & Brushed Brass.

Chrome and Matt Black Single Panel Screens are Rise & Fall

Single Panel Curved Bath Screens

		H1400 x W780 x D6mm
CHROME	*KONSS*	**£187.00**
BLACK PROFILE	*NER-SS*	**£201.00**
BRUSHED BRASS PROFILE	*BSCURBR*	**£218.00**

Single Panel Square Bath Screens

		H1400 x W780 x D6mm
CHROME	*KONSSS*	**£187.00**
BLACK PROFILE	*NER-SSS*	**£201.00**
BRUSHED BRASS PROFILE	*BSSQBR*	**£218.00**

Bath Screen Extension Panels

- Extension panel screens for extra coverage.
- Great for longer bathtubs or powerful showers.

Bath Screen with Extension Panel

		H1400 x W1000 x D6mm
CURVED CHROME	*KONSS1*	**£275.00**
SQUARE CHROME	*KONSSS1*	**£275.00**

Chrome

NEW

Matt Black

4 Panel Folding Bath Screen

- Folds away for extra space
- Easy access to whole tub
- Provides extra room for entering/exiting

		H1400 x W800 x D6mm
CHROME PROFILE	*KON4F*	**£246.00**
MATT BLACK	*AQ4FBLK*	**£269.00**

Framed Matt Black Bath Screen

- Framed matt black screen
- Ultimate in style & design

		H1435 x W780 x D6mm
BLACK PROFILE	*KRI-SS*	**£240.00**

SHOWERING

Shower Trays

Natural Stone Effect

- Stone effect shower trays in 3 stunning slate effect finishes, available in a wide range of sizes.
- Slimline 30mm height installs flat to the floor, with anti-slip surface for your comfort and safety.
- Waste covers available in Chrome, Graphite Grey, White, Black and Brushed Brass. (90mm ABS fast flow waste also required for installation).

Rectangular

Howarth Black			Flamborough White			Graphite Grey		
1000 X 700MM	STOR0710BK	£374.00	1000 X 700MM	STOR0710WH	£374.00	1000 X 700MM	STOR0710GP	£374.00
1000 X 800MM	STOR0810BK	£415.00	1000 X 800MM	STOR0810WH	£415.00	1000 X 800MM	STOR0810GP	£415.00
1000 X 900MM	STOR0910BK	£457.00	1000 X 900MM	STOR0910WH	£457.00	1000 X 900MM	STOR0910GP	£457.00
1200 X 700MM	STOR0712BK	£436.00	1200 X 700MM	STOR0712WH	£436.00	1200 X 700MM	STOR0712GP	£436.00
1200 X 800MM	STOR0812BK	£488.00	1200 X 800MM	STOR0812WH	£488.00	1200 X 800MM	STOR0812GP	£488.00
1200 X 900MM	STOR0912BK	£540.00	1200 X 900MM	STOR0912WH	£540.00	1200 X 900MM	STOR0912GP	£540.00
1400 X 700MM	STOR0714BK	£499.00	1400 X 700MM	STOR0714WH	£499.00	1400 X 700MM	STOR0714GP	£499.00
1400 X 800MM	STOR0814BK	£551.00	1400 X 800MM	STOR0814WH	£551.00	1400 X 800MM	STOR0814GP	£551.00
1400 X 900MM	STOR0914BK	£613.00	1400 X 900MM	STOR0914WH	£613.00	1400 X 900MM	STOR0914GP	£613.00
1500 X 700MM	STOR0715BK	£530.00	1500 X 700MM	STOR0715WH	£530.00	1500 X 700MM	STOR0715GP	£530.00
1500 X 800MM	STOR0815BK	£592.00	1500 X 800MM	STOR0815WH	£592.00	1500 X 800MM	STOR0815GP	£592.00
1500 X 900MM	STOR0915BK	£655.00	1500 X 900MM	STOR0915WH	£655.00	1500 X 900MM	STOR0915GP	£655.00
1600 X 700MM	STOR0716BK	£551.00	1600 X 700MM	STOR0716WH	£551.00	1600 X 700MM	STOR0716GP	£551.00
1600 X 800MM	STOR0816BK	£623.00	1600 X 800MM	STOR0816WH	£623.00	1600 X 800MM	STOR0816GP	£623.00
1600 X 900MM	STOR0916BK	£696.00	1600 X 900MM	STOR0916WH	£696.00	1600 X 900MM	STOR0916GP	£696.00
1700 X 700MM	STOR0717BK	£592.00	1700 X 700MM	STOR0717WH	£592.00	1700 X 700MM	STOR0717GP	£592.00
1700 X 800MM	STOR0817BK	£665.00	1700 X 800MM	STOR0817WH	£665.00	1700 X 800MM	STOR0817GP	£665.00
1700 X 900MM	STOR0917BK	£748.00	1700 X 900MM	STOR0917WH	£748.00	1700 X 900MM	STOR0917GP	£748.00

Quadrant

Howarth Black			Flamborough White			Graphite Grey		
900 X 900MM	STOR0909QBK	£395.00	900 X 900MM	STOR0909QWH	£395.00	900 X 900MM	STOR0909QGP	£395.00

Waste Covers

CHROME	GRAPHITE GREY	WHITE	BLACK	BRUSHED BRASS
STORWCH	STORWGP	STORWWH	STORWBK	STORWBB
£37.00	£37.00	£37.00	£37.00	£37.00

Chrome Brassware

Matt Black & Brushed Brass Brassware

*90mm ABS fast flow waste also required for installation (see page 199 for options).
Choose your desired finish of brass waste cover to match.

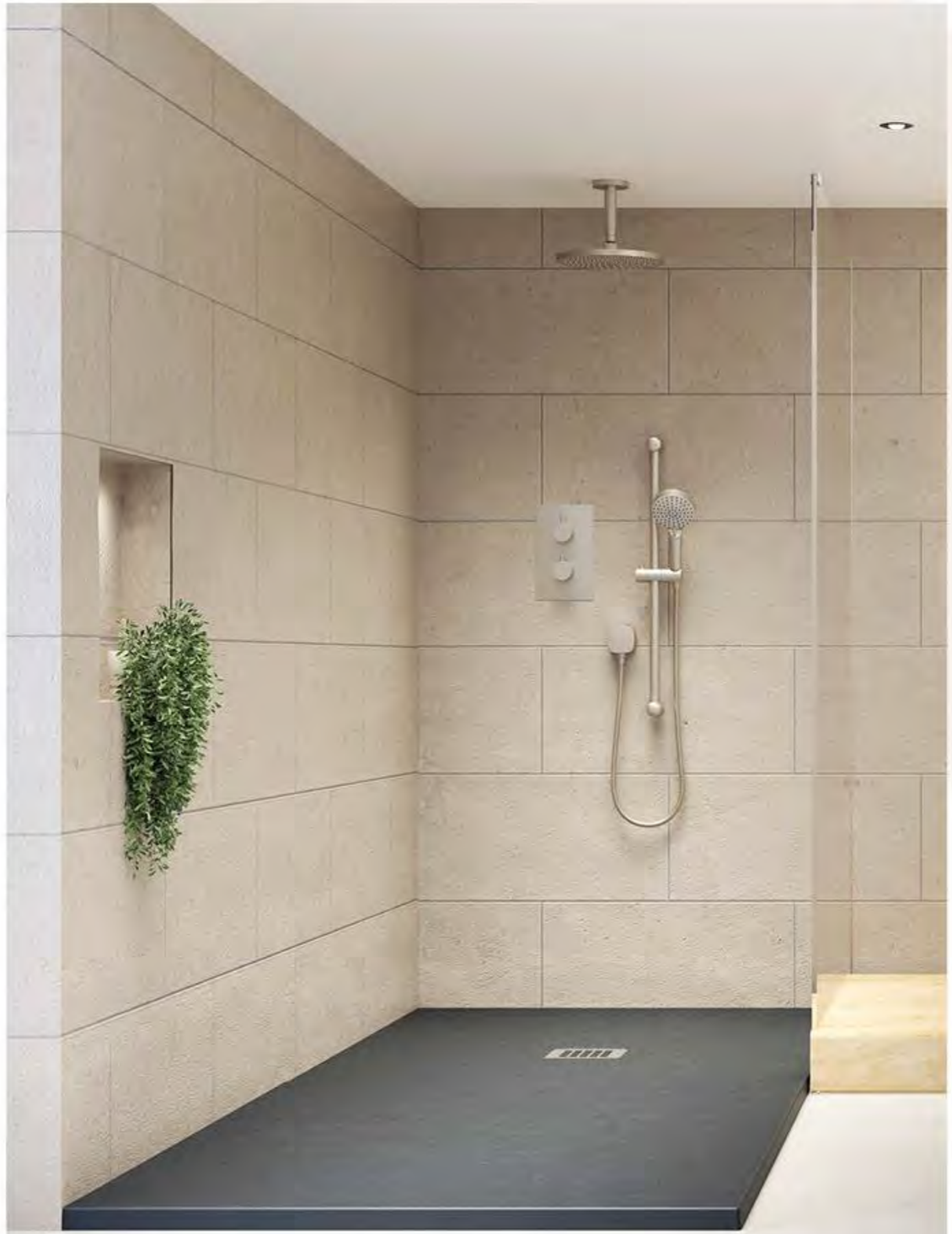

Howarth Black Shower Tray

Low Profile

- 45mm Low Profile
- Stone Resin
- Requires 90mm fast flow waste
- 47 size options
- Installs flat to floor or with Easy Plumb Kit / New Legset

Anti-Slip

- 45mm Low Profile
- Stone Resin
- Requires 90mm fast flow waste
- 22 size options
- Installs flat to floor or with Easy Plumb Kit / Legset
- Class C Anti-Slip (DIN51097-1992-11) integrated into the tray

Square

Low Profile

700MM	*KRS0707UN*	**£177.00**
760MM	*KRS7676UN*	**£190.00**
800MM	*KRS0808UN*	**£190.00**
900MM	*KRS0909UN*	**£215.00**
1000MM	*KRS1010UN*	**£283.00**

(Left Hand Shown)

Offset Quadrant

900 x 760mm

LEFT HAND	*KRQL0976UN*	**£234.00**
RIGHT HAND	*KRQR0976UN*	**£234.00**

1000 x 800mm

LEFT HAND	*KRQL1008UN*	**£243.00**
RIGHT HAND	*KRQR1008UN*	**£243.00**

1200 x 800mm

LEFT HAND	*KRQL1208UN*	**£271.00**
RIGHT HAND	*KRQR1208UN*	**£271.00**

1200 x 900mm

LEFT HAND	*KRQL1209UN*	**£283.00**
RIGHT HAND	*KRQR1209UN*	**£283.00**

Quadrant

Low Profile

800MM	*KRQ0808UN*	**£202.00**
900MM	*KRQ0909UN*	**£215.00**
1000MM	*KRQ1010UN*	**£275.00**

Rectangle 700mm Wide

Low Profile

900 X 700MM	KRR0907UN	£248.00
1000 X 700MM	KRR1007UN	£248.00
1200 X 700MM	KRR1207UN	£275.00
1400 X 700MM	KRR1407UN	£376.00
1500 X 700MM	KRR1507UN	£389.00
1600 X 700MM	KRR1607UN	£411.00
1700 X 700MM	KRR1707UN	£446.00

Anti-Slip

1000 X 700MM	AST1007UN	£328.00
1200 X 700MM	AST1207UN	£383.00
1400 X 700MM	AST1407UN	£420.00
1500 X 700MM	AST1507UN	£479.00
1600 X 700MM	AST1607UN	£520.00
1700 X 700MM	AST1707UN	£593.00

Rectangle 760mm Wide

Low Profile

900 X 760MM	KRR0976UN	£248.00
1000 X 760MM	KRR1076UN	£248.00
1100 X 760MM	KRR1176UN	£275.00
1200 X 760MM	KRR1276UN	£275.00
1500 X 760MM	KRR1576UN	£389.00
1600 X 760MM	KRR1676UN	£411.00
1700 X 760MM	KRR1776UN	£446.00

Anti-Slip

1000 X 760MM	AST1076UN	£328.00
1200 X 760MM	AST1276UN	£383.00
1600 X 760MM	AST1676UN	£520.00
1700 X 760MM	AST1776UN	£593.00

Rectangle 800mm Wide

Low Profile

900 X 800MM	KRR0908UN	£248.00
1000 X 800MM	KRR1008UN	£248.00
1100 X 800MM	KRR1108UN	£275.00
1200 X 800MM	KRR1208UN	£275.00
1300 X 800MM	KRR1308UN	£322.00
1400 X 800MM	KRR1408UN	£376.00
1500 X 800MM	KRR1508UN	£389.00
1600 X 800MM	KRR1608UN	£411.00
1700 X 800MM	KRR1708UN	£474.00
1800 X 800MM	KRR1808UN	£497.00

Anti-Slip

900 X 800MM	AST0908UN	£328.00
1000 X 800MM	AST1008UN	£328.00
1100 X 800MM	AST1108UN	£372.00
1200 X 800MM	AST1208UN	£383.00
1400 X 800MM	AST1408UN	£420.00
1500 X 800MM	AST1508UN	£479.00
1600 X 800MM	AST1608UN	£520.00
1700 X 800MM	AST1708UN	£593.00
1800 X 800MM	AST1808UN	£646.00

Rectangle 900mm Wide

Low Profile

1000 X 900MM	KRR1009UN	£248.00
1100 X 900MM	KRR1109UN	£275.00
1200 X 900MM	KRR1209UN	£275.00
1400 X 900MM	KRR1409UN	£376.00
1500 X 900MM	KRR1509UN	£389.00
1600 X 900MM	KRR1609UN	£424.00
1700 X 900MM	KRR1709UN	£480.00

Anti-Slip

1200 X 900MM	AST1209UN	£383.00
1400 X 900MM	AST1409UN	£420.00
1700 X 900MM	AST1709UN	£593.00

Easy Plumb Kit

- Raises the shower tray 90mm to allow drainage to be installed above floor level
- Levels tray on uneven floors
- Upgraded feet design allows screwing directly in to shower tray base
- New tray underside design
- Flusher fit to the floor with threaded inserts to accomodate re-designed feet
- Ensures solid connection for extra stabilty and easier installation

Quadrant Trays	Offset Quadrant Trays	Tray Feet (no plinth) (2 x packs of 6)	Square / Rectangle (< 1200mm)	Large Rectangle (1400-1800mm)
JTKQUN	JTKOSUN	TRFEETJTUN	JTKSRUN	JTKSR1800UN
£110.00	£110.00	£76.00	£85.00	£114.00

Tray Wastes (90mm Fast Flow)

NEW

ABS Cover

CHROME	CTW001	£20.00
BLACK	FFW90-BLACK	£43.00
WHITE	FFW90-WHITE	£43.00
BRUSHED BRASS	FFW90-BRASS	£48.00

Premium Brass Cover

CHROME BRASS	CP132	£63.00
BLACK BRASS	CP149	£66.00
WHITE BRASS	CP148	£66.00
BRUSHED BRASS	CP150	£70.00

White ABS Cover
Now Available

Brushed Brass Aluminium Cover

Ocean 6 *Plus*

- 1850mm high, 6mm thick toughened safety glass
- Doors can be fitted right or left handed.
- Generous wall adjustment allows the frame to fit against 'out of true' walls.

Comfort & Simplicity

With clip out metal door runners, it's simple to keep these doors spotless. The high-quality smooth sliding doors ensure comfort and ease of use.

6mm 1.85m

Chrome Brassware | Matt Black & Brushed Brass Brassware | Ocean Glass

Ocean 6 *Plus* Sliding Doors

Size	Adjustment	Aperture	Code	Price
1000MM	950-990MM	400MM	*SIX1000SD*	**£412.00**
1100MM	1050-1090MM	450MM	*SIX1100SD*	**£424.00**
1200MM	1150-1190MM	500MM	*SIX1200SD*	**£445.00**
1400MM	1350-1390MM	600MM	*SIX1400SD*	**£543.00**
1500MM	1450-1490MM	650MM	*SIX1500SD*	**£558.00**
1600MM	1550-1590MM	700MM	*SIX1600SD*	**£574.00**
1700MM	1650-1690MM	750MM	*SIX1700SD*	**£582.00**

Extension Profile

20MM PAIR	*SIXEXT*	**£120.00**

Ocean 6 *Plus* Frameless Side Panels

Size	Adjustment	Code	Price
700MM	670-690MM	*SIX700SP*	**£267.00**
760MM	730-750MM	*SIX760SP*	**£284.00**
800MM	770-790MM	*SIX800SP*	**£297.00**
900MM	870-890MM	*SIX900SP*	**£315.00**

Quadrant Enclosures

Quadrant Enclosures are available in Single and Double Door options.

6mm 1.85m

Chrome Brassware | Matt Black & Brushed Brass Brassware | Ocean Glass

New Option Available
1000 x 800mm Single Door

Ocean 6 *Plus* Double Door Quadrants

Size	Adjustment	Aperture	Code	Price
800MM	750-790MM	400MM	*6KON800Q*	**£468.00**
900MM	850-890MM	520MM	*6KON900Q*	**£468.00**
1000MM	950-990MM	560MM	*6KON100Q*	**£515.00**

Ocean 6 *Plus* Single Door Quadrants

Size	Adjustment	Aperture	Code	Price
900MM	850-890MM	450MM	*SIX900SQ*	**£494.00**

Ocean 6 *Plus* Double Door Offset Quadrants

Size	Adjustment	Aperture	Code	Price
1000 × 800MM	970-990MM 770-790MM	455MM	*6KON108Q*	**£520.00**
1200 × 800MM	1170-1190MM 770-790MM	455MM	*6KON128Q*	**£595.00**

Ocean 6 *Plus* Single Door Offset Quadrants

Size	Adjustment	Aperture	Code	Price
1000 × 800MM	1070-1090MM 770-790MM	440MM	*SIX108SQ*	**£599.00**
1200 × 800MM	1170-1190MM 770-790MM	440MM	*SIX128SQ*	**£619.00**

Pivot Door

The pivot mechanism mounted on the top and bottom of the door allows the door to swing open in a compact arc, perfect for corners and other small spaces.

6mm · 1.85m

Chrome Brassware · Matt Black & Brushed Brass Brassware · Ocean Glass

Bi-Fold Door

Perfect for small bathrooms and en-suites as door folds inward.

6mm · 1.85m

Chrome Brassware · Matt Black & Brushed Brass Brassware · Ocean Glass

Ocean 6 *Plus* Pivot Doors

Size	Adjustment	Aperture	Code	Price
700MM	650-690MM	450MM	*SIX700PD*	**£406.00**
760MM	710-750MM	510MM	*SIX760PD*	**£412.00**
800MM	750-790MM	550MM	*SIX800PD*	**£423.00**
900MM	850-890MM	650MM	*SIX900PD*	**£441.00**

Ocean 6 *Plus* Frameless Side Panels

Size	Adjustment	Code	Price
700MM	670-690MM	*SIX700SP*	**£267.00**
760MM	730-750MM	*SIX760SP*	**£284.00**
800MM	770-790MM	*SIX800SP*	**£297.00**
900MM	870-890MM	*SIX900SP*	**£315.00**

Extension Profile

20MM PAIR	*SIXEXT*	**£120.00**

Ocean 6 *Plus* Bi-Fold Doors

Size	Adjustment	Aperture	Code	Price
760MM	710-750MM	530MM	*SIX760BF*	**£473.00**
800MM	750-790MM	570MM	*SIX800BF*	**£487.00**
900MM	850-890MM	670MM	*SIX900BF*	**£498.00**

Ocean 6 *Plus* Frameless Side Panels

Size	Adjustment	Code	Price
700MM	670-690MM	*SIX700SP*	**£267.00**
760MM	730-750MM	*SIX760SP*	**£284.00**
800MM	770-790MM	*SIX800SP*	**£297.00**
900MM	870-890MM	*SIX900SP*	**£315.00**

Extension Profile

20MM PAIR	*SIXEXT*	**£120.00**

Aspect

- 2m high, 8mm thick, clear shield toughened safety glass.
- Doors can be fitted right or left handed.
- Easy Fix System, saving on installation time.
- Generous wall adjustment allows the frame to fit against 'out of true' walls.

Aspect Shower Door

The Aspect 8mm Shower Door range offers a stunning focal point in any bathroom. Standing at an impressive 2m in height, the range is a fusion of function and contemporary design.

Easy Glide Rollers

Dual Brass Handles

Aluminium Frame

CLEAR SHIELD · 8mm · 2.0m

Easy-Fix System for Quick Installation

10 Chrome Brassware · 5 Matt Black & Brushed Brass Brassware · LIFETIME Aspect Glass

Aspect Sliding Doors

				Chrome		Matt Black		Brushed Brass	
Size	Adjustment	Adjustment (with side panel)	Aperture	Code	Price	Code	Price	Code	Price
1000MM	955-995MM	960-995MM	378MM	USE00008	£694.00	USE00045	£694.00	USE00081	£760.00
1100MM	1055-1095MM	1060-1095MM	428MM	USE00009	£699.00	USE00046	£699.00	USE00082	£771.00
1200MM	1155-1195MM	1160-1195MM	478MM	USE00010	£733.00	USE00047	£733.00	USE00083	£803.00
1300MM	1255-1295MM	1260-1295MM	528MM	USE00011	£782.00	USE00048	£782.00	USE00084	£858.00
1400MM	1355-1395MM	1360-1395MM	578MM	USE00012	£815.00	USE00049	£815.00	USE00085	£896.00
1600MM	1555-1595MM	1560-1595MM	578MM	USE00033	£929.00	USE00069	£929.00	USE00105	£1022.00
1700MM	1655-1695MM	1660-1695MM	578MM	USE00034	£951.00	USE00070	£951.00	USE00106	£1044.00
1800MM	1755-1795MM	1760-1795MM	578MM	USE00035	£983.00	USE00071	£983.00	USE00107	£1082.00

Easy-Fix System for Quick Installation

CLEAR SHIELD · 8mm · 2.0m

10 Chrome Brassware · 5 Matt Black & Brushed Brass Brassware · LIFETIME Aspect Glass

Aspect Frameless Side Panels & Profiles

		Chrome		Matt Black		Brushed Brass	
Size	Adjustment	Code	Price	Code	Price	Code	Price
700MM	665-685MM	USE00022	£405.00	USE00058	£405.00	USE00094	£449.00
760MM	725-745MM	USE00023	£405.00	USE00059	£405.00	USE00095	£449.00
800MM	765-785MM	USE00024	£405.00	USE00060	£405.00	USE00096	£449.00
900MM	865-885MM	USE00025	£437.00	USE00061	£437.00	USE00097	£481.00
1000MM	965-985MM	USE00026	£481.00	USE00062	£481.00	USE00098	£531.00
EXTENSION PROFILE 30MM		USE00027	£138.00	USE00063	£138.00	USE00099	£153.00

Easy Glide Rollers

Dual Brass Handles

Spring Loaded Rollers for Easy Clean

Quadrant Enclosures

CLEAR SHIELD · 8mm · 2.0m

10 Chrome Brassware · 5 Matt Black & Brushed Brass Brassware · LIFETIME Aspect Glass

Easy-Fix System for Quick Installation

Aspect Double Door Quadrant

Size	Adjustment	Aperture	Chrome Code	Chrome Price	Matt Black Code	Matt Black Price	Brushed Brass Code	Brushed Brass Price
900MM	865-885MM	524MM	USE00001	£842.00	USE00039	£842.00	USE00075	£929.00

Easy-Fix System for Quick Installation

CLEAR SHIELD · 8mm · 2.0m

10 Chrome Brassware · 5 Matt Black & Brushed Brass Brassware · LIFETIME Aspect Glass

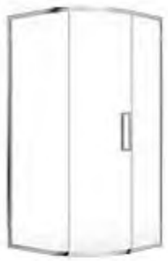

Aspect Single Door Quadrant

Size	Adjustment	Aperture	Chrome Code	Chrome Price	Matt Black Code	Matt Black Price	Brushed Brass Code	Brushed Brass Price
900MM	865-885MM	430MM	USE00028	£1005.00	USE00084	£1005.00	USE00100	£1109.00
1000MM	965-985MM	430MM	USE00029	£1044.00	USE00065	£1044.00	USE00101	£1148.00

CLEAR SHIELD · 8mm · 2.0m

10 Chrome Brassware · 5 Matt Black & Brushed Brass Brassware · LIFETIME Aspect Glass

Easy-Fix System for Quick Installation

Aspect Single Door Offset Quadrant

Size	Adjustment	Aperture	Chrome Code	Chrome Price	Matt Black Code	Matt Black Price	Brushed Brass Code	Brushed Brass Price
1000 × 800MM	965-985MM 765-785MM	430MM	USE00030	£1044.00	USE00066	£1044.00	USE00102	£1148.00
1200 × 800MM	1165-1185MM 765-785MM	430MM	USE00031	£1087.00	USE00067	£1087.00	USE00103	£1196.00
1200 × 900MM	1165-1185MM 865-885MM	430MM	USE00032	£1087.00	USE00068	£1087.00	USE00104	£1196.00

Minimalist Signature Hinge

Dual Brass Handles

Brass Inline Support Arm
(supplied with inline panels)

Aspect Hinged Door

CLEAR SHIELD · 8mm · 2.0m

Chrome Brassware · Matt Black & Brushed Brass Brassware · Aspect Glass

Easy-Fix System for Quick Installation

Aspect Hinged Doors

Size	Adjustment	Adjustment (with side panel)	Aperture	Chrome Code	Chrome Price	Matt Black Code	Matt Black Price	Brushed Brass Code	Brushed Brass Price
700MM	655-695MM	660-695MM	470MM	USE00017	£612.00	USE00053	£612.00	USE00089	£672.00
760MM	715-755MM	720-755MM	530MM	USE00018	£634.00	USE00054	£634.00	USE00090	£694.00
800MM	755-795MM	760-795MM	570MM	USE00019	£645.00	USE00055	£645.00	USE00091	£711.00
900MM	855-895MM	860-895MM	670MM	USE00020	£667.00	USE00056	£667.00	USE00092	£733.00

Easy-Fix System for Quick Installation

CLEAR SHIELD · 8mm · 2.0m

Chrome Brassware · Matt Black & Brushed Brass Brassware · Aspect Glass

Aspect Hinged & Inline Doors

Size	Adjustment	Adjustment (with side panel)	Aperture	Chrome Code	Chrome Price	Matt Black Code	Matt Black Price	Brushed Brass Code	Brushed Brass Price
1000MM	955-995MM	960-995MM	470MM	USE00036	£869.00	USE00072	£869.00	USE00108	£956.00
1100MM	1055-1095MM	1060-1095MM	570MM	USE00037	£880.00	USE00073	£880.00	USE00109	£968.00
1200MM	1155-1195MM	1160-1195MM	670MM	USE00038	£891.00	USE00074	£891.00	USE00110	£978.00

Easy-Fix System for Quick Installation

CLEAR SHIELD · 8mm · 2.0m

Chrome Brassware · Matt Black & Brushed Brass Brassware · Aspect Glass

Aspect Frameless Side Panels & Profiles

Size	Adjustment	Chrome Code	Chrome Price	Matt Black Code	Matt Black Price	Brushed Brass Code	Brushed Brass Price
700MM	665-685MM	USE00022	£405.00	USE00058	£405.00	USE00094	£449.00
760MM	725-745MM	USE00023	£405.00	USE00059	£405.00	USE00095	£449.00
800MM	765-785MM	USE00024	£405.00	USE00060	£405.00	USE00096	£449.00
900MM	865-885MM	USE00025	£437.00	USE00061	£437.00	USE00097	£481.00
1000MM	965-985MM	USE00026	£481.00	USE00062	£481.00	USE00098	£531.00
EXTENSION PROFILE 30MM		USE00027	£138.00	USE00063	£138.00	USE00099	£153.00

Easy-Fix System for Quick Installation

Chrome Brassware | Matt Black & Brushed Brass Brassware | Aspect Glass

Aspect Infold Doors

Size	Adjustment	Adjustment (with side panel)	Aperture	Chrome Code	Chrome Price	Matt Black Code	Matt Black Price	Brushed Brass Code	Brushed Brass Price
700MM	655-695MM	664-704MM	484MM	USE00155	£585.00	USE00160	£585.00	USE00164	£625.00
760MM	715-755MM	724-764MM	541MM	USE00157	£595.00	USE00161	£595.00	USE00165	£650.00
800MM	755-795MM	764-804MM	579MM	USE00158	£615.00	USE00162	£615.00	USE00166	£675.00
900MM	855-895MM	864-904MM	674MM	USE00159	£625.00	USE00163	£625.00	USE00167	£695.00

Easy-Fix System for Quick Installation

Chrome Brassware | Matt Black & Brushed Brass Brassware | Aspect Glass

Aspect Infold & Inline Doors

Size	Adjustment	Adjustment (with side panel)	Aperture	Chrome Code	Chrome Price	Matt Black Code	Matt Black Price	Brushed Brass Code	Brushed Brass Price
1000MM	955-995MM	960-995MM	470MM	USE00208	£795.00	USE00209	£795.00	USE00210	£850.00
1100MM	1055-1095MM	1060-1095MM	570MM	USE00211	£825.00	USE00212	£825.00	USE00213	£875.00
1200MM	1155-1195MM	1160-1195MM	670MM	USE00214	£835.00	USE00215	£835.00	USE00216	£895.00

Easy-Fix System for Quick Installation

Chrome Brassware | Matt Black & Brushed Brass Brassware | Aspect Glass

Aspect Frameless Side Panels & Profiles

Size	Adjustment	Chrome Code	Chrome Price	Matt Black Code	Matt Black Price	Brushed Brass Code	Brushed Brass Price
700MM	665-685MM	USE00022	£405.00	USE00058	£405.00	USE00094	£449.00
760MM	725-745MM	USE00023	£405.00	USE00059	£405.00	USE00095	£449.00
800MM	765-785MM	USE00024	£405.00	USE00060	£405.00	USE00096	£449.00
900MM	865-885MM	USE00025	£437.00	USE00061	£437.00	USE00097	£481.00
1000MM	965-985MM	USE00026	£481.00	USE00062	£481.00	USE00098	£531.00
EXTENSION PROFILE 30MM		USE00027	£138.00	USE00063	£138.00	USE00099	£153.00

Ocean 8 *Plus*

- 2000mm high, 8mm thick, easy-clean toughened safety glass with a generous adjustment for out of true walls.
- Reversible panels can be fitted with right or left handed mounting.
- Profile Pack, Wall Arm & T-piece available in all finishes.
- Option of 300mm Hinged Flipper available in all finishes.
- Option of 2m Decorative Edge available in all finishes.

8mm

2.0m

Chrome Brassware | Matt Black & Brushed Brass Brassware | Ocean Glass

Profile Packs now come separately in your desired finish

Ocean 8 *Plus* Wetroom Panel (Glass Only)

Size/Finish	Code	Price
600MM PANEL	*WET600*	**£205.00**
700MM PANEL	*WET700*	**£215.00**
760MM PANEL	*WET760*	**£225.00**
800MM PANEL	*WET800*	**£234.00**
900MM PANEL	*WET900*	**£252.00**
1000MM PANEL	*WET1000*	**£269.00**
1100MM PANEL	*WET1100*	**£313.00**
1200MM PANEL	*WET1200*	**£313.00**

Ocean 8 *Plus* Profile Pack

Finish	Code	Price
CHROME	*CHR-CONV*	**£102.00**
MATT BLACK	*NER-CONV*	**£102.00**
BRUSHED BRASS	*BRASS-CONV*	**£148.00**

Ocean 8 *Plus* Hinged Flipper

Size/Finish	Code	Price
300MM FLIPPER CHROME	*EIGHT300W*	**£236.00**
300MM FLIPPER MATT BLACK	*NER300W*	**£252.00**
300MM FLIPPER BRUSHED BRASS	*BRASS300W*	**£286.00**

Ocean 8 *Plus* Decorative Edges

Size/Finish	Code	Price
2M DECORATIVE EDGE CHROME	*EIGHT200DECP*	**£45.00**
2M DECORATIVE EDGE MATT BLACK	*EIGHT200DEBL*	**£45.00**
2M DECORATIVE EDGE BRUSHED BRASS	*EIGHT200DEBR*	**£50.00**

SONAS

Aspect

- 2000mm high, 8mm thick, easy-clean toughened safety glass with a generous adjustment for out of true walls.
- Reversible panels can be fitted with right or left handed mounting.
- Profile Pack, Wall Arm & T-piece available in all finishes.
- Option of 300mm Rise & Fall Flipper available in all finishes.

CLEAR SHIELD | 8mm | 2.0m

10 Chrome Brassware | 5 Matt Black & Brushed Brass Brassware | LIFETIME Aspect Glass

SONAS

Aspect Wetroom Panel (Glass Only)

Size	Adjustment Min-Max	Code	Price
700MM	670-690MM	*UWP0001*	**£269.00**
800MM	770-790MM	*UWP0002*	**£269.00**
900MM	870-890MM	*UWP0003*	**£318.00**
1000MM	970-990MM	*UWP0004*	**£328.00**
1100MM	1070-1090MM	*UWP0005*	**£356.00**
1200MM	1170-1190MM	*UWP0006*	**£383.00**

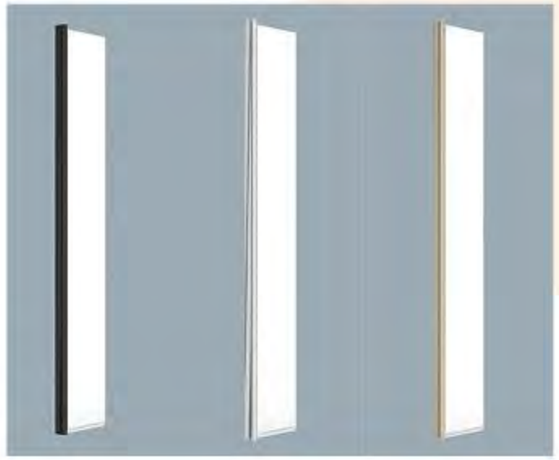

Aspect Rise & Fall Flipper Panel

Finish	Size	Code	Price
CHROME	300MM	*ACWRFP*	**£306.00**
MATT BLACK	300MM	*ABWRFP*	**£306.00**
BRUSHED BRASS	300MM	*UWP0013*	**£400.00**

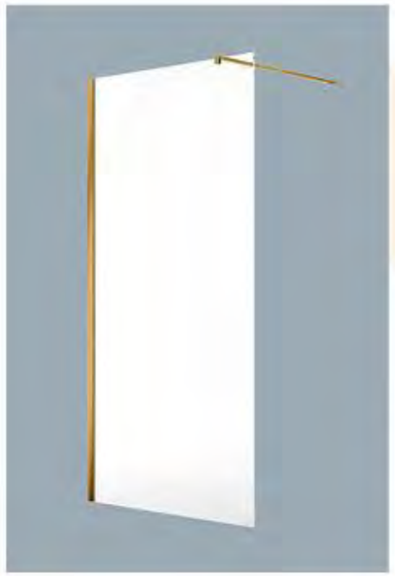

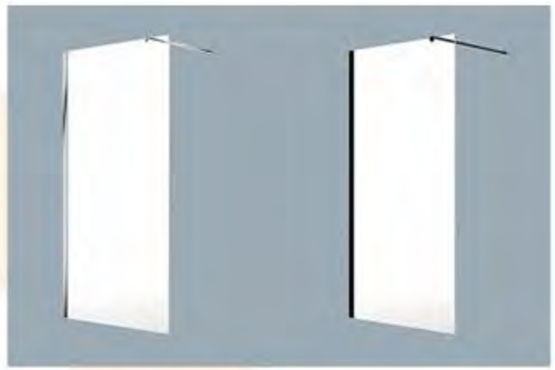

Aspect Profile Pack

Finish	Code	Price
CHROME	*UWP0008*	**£165.00**
MATT BLACK	*UWP0009*	**£165.00**
BRUSHED BRASS	*UWP0021*	**£383.00**

Scandinavian

NEW

CLEAR SHIELD | 8mm | 2.0m

10 | 5 | LIFETIME

Chrome Brassware | Matt Black & Brushed Brass Brassware | Aspect Glass

Colour Match with Sonas Furniture Range

Corner Seal Connector

UWPSP00007	**£15.00**

Scandinavian Wetroom Panels

Finish (Matt)	300mm (Adjust Min-Max 270-290)	400mm (Adjust Min-Max 370-390)	500mm (Adjust Min-Max 470-790)	600mm (Adjust Min-Max 570-590)	700mm (Adjust Min-Max 670-690)
MATT CASHMERE PINK	*UWP0124*	*UWP0125*	*UWP0126*	*UWP0127*	*UWP0062*
MATT MORNING SKY BLUE	*UWP0128*	*UWP0129*	*UWP0130*	*UWP0131*	*UWP0089*
MATT OCEAN BLUE	*UWP0132*	*UWP0133*	*UWP0134*	*UWP0135*	*UWP0076*
MATT NIGHT SKY BLUE	*UWP0136*	*UWP0137*	*UWP0138*	*UWP0139*	*UWP0083*
MATT KHAKI	*UWP0140*	*UWP0141*	*UWP0142*	*UWP0143*	*UWP0055*
MATT CORAL GREEN	*UWP0144*	*UWP0145*	*UWP0146*	*UWP0147*	*UWP0090*
MATT WREATH GREEN	*UWP0148*	*UWP0149*	*UWP0150*	*UWP0151*	*UWP0097*
MATT ARCTIC GREY	*UWP0152*	*UWP0153*	*UWP0154*	*UWP0155*	*UWP0048*
MATT MIDNIGHT GREY	*UWP0156*	*UWP0157*	*UWP0158*	*UWP0159*	*UWP0041*
	£430.00	**£450.00**	**£475.00**	**£500.00**	**£550.00**

Matt Cashmere Pink | Morning Sky Blue | Matt Ocean Blue | Matt Night Sky Blue | Matt Khaki

Matt Coral Green | Matt Wreath Green | Matt Arctic Grey | Matt Midnight Grey

300mm Ride & Fall Flipper Panel

	300mm
MATT CASHMERE PINK	*UWP0035*
MATT MORNING SKY BLUE	*UWP0036*
MATT OCEAN BLUE	*UWP0037*
MATT NIGHT SKY BLUE	*UWP0038*
MATT KHAKI	*UWP0034*
MATT CORAL GREEN	*UWP0039*
MATT WREATH GREEN	*UWP0040*
MATT ARCTIC GREY	*UWP0033*
MATT MIDNIGHT GREY	*UWP0032*
	£395.00

800mm (Adjust Min-Max 770-790)	900mm (Adjust Min-Max 870-890)	1000mm (Adjust Min-Max 970-990)	1100mm (Adjust Min-Max 1070-1090)	1200mm (Adjust Min-Max 1170-1190)	1400mm (Adjust Min-Max 1370-1390)
UWP0063	*UWP0064*	*UWP0065*	*UWP0066*	*UWP0067*	*UWP0068*
UWP0070	*UWP0071*	*UWP0072*	*UWP0073*	*UWP0074*	*UWP0075*
UWP0077	*UWP0078*	*UWP0079*	*UWP0080*	*UWP0081*	*UWP0082*
UWP0084	*UWP0085*	*UWP0086*	*UWP0087*	*UWP0088*	*UWP0089*
UWP0056	*UWP0057*	*UWP0058*	*UWP0059*	*UWP0060*	*UWP0061*
UWP0091	*UWP0092*	*UWP0093*	*UWP0094*	*UWP0095*	*UWP0096*
UWP0098	*UWP0099*	*UWP0100*	*UWP0101*	*UWP0102*	*UWP0103*
UWP0049	*UWP0050*	*UWP0051*	*UWP0052*	*UWP0053*	*UWP0054*
UWP0042	*UWP0043*	*UWP0044*	*UWP0045*	*UWP0046*	*UWP0047*
£575.00	**£595.00**	**£610.00**	**£645.00**	**£675.00**	**£715.00**

WRAS APPROVED PRODUCT

BENKÉ

Rondo *Plus*

Round Cool Touch Thermostatic Drench Head

CHROME	MATT BLACK
SHOCOOLR	*SHOCOOLRMB*
£323.00	**£387.00**

CHROME	MATT BLACK
SHOCOOLS	*SHOCOOLSMB*
£432.00	**£514.00**

BRUSHED BRASS	GUNMETAL
SHOCOOLRBB	*SHOCOOLRGM*
£436.00	**£436.00**

BRUSHED BRASS	GUNMETAL
SHOCOOLSBB	*SHOCOOLSGM*
£545.00	**£545.00**

Chrome Brassware

Matt Black & Brushed Brass Brassware

Plaza *Plus*

Square Cool Touch Thermostatic Drench Head

Chrome Brassware

Matt Black & Brushed Brass Brassware

WRAS APPROVED PRODUCT

Plan & Pure

Chrome Brassware

Matt Black Brassware

Plan Thermostatic Bar Shower

CHROME	*SHO007PL*	**£247.00**
MATT BLACK	*SHO052NR*	**£299.00**

Chrome Brassware

Matt Black Brassware

Pure Thermostatic Bar Shower

CHROME	*SHO030PR*	**£334.00**
MATT BLACK	*SHO050NS*	**£352.00**

BENKÉ

Bar Valve Showers

Premium Round Thermostatic Bar Valve with Slide Rail Kit

CHROME	*RBARKCH*	**£230.00**
MATT BLACK	*RBARKMB*	**£263.00**

Premium Square Thermostatic Bar Valve with Slide Rail Kit

CHROME	*SQBARKCH*	**£230.00**
MATT BLACK	*SQBARKMB*	**£263.00**

Chrome Brassware

Matt Black Brassware

Round Thermostatic Bar Valve with Slide Rail Kit

CHROME	*SHO005PL*	**£135.00**

Easy Fix Kit

CHROME	*SHO100FF*	**£21.00**

Kolt

Kolt Drench Head Shower Brushed Nickel

Kolt Thermostatic Drench Head Shower

CHROME	SHO300KCP	£323.00
MATT BLACK	SHO310KBL	£464.00
BRUSHED BRASS	SHO320KBB	£464.00
BRUSHED NICKEL	SHO330KBN	£464.00

Kolt Slide Rail Kit

CHROME	SHO302KCP	£53.00
MATT BLACK	SHO312KBL	£64.00
BRUSHED BRASS	SHO322KBB	£64.00
BRUSHED NICKEL	SHO332KBN	£64.00

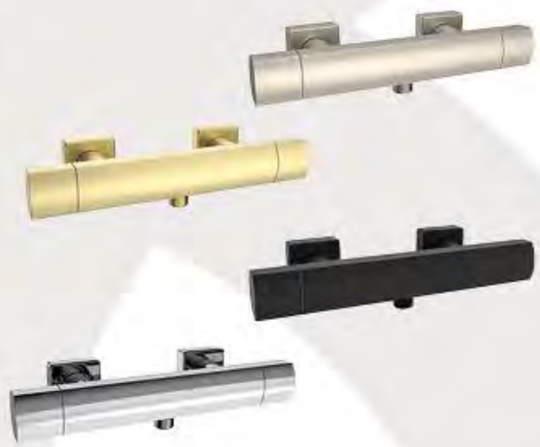

Kolt Thermostatic Bar Shower

CHROME	SHO301KCP	£172.00
MATT BLACK	SHO311KBL	£193.00
BRUSHED BRASS	SHO321KBB	£193.00
BRUSHED NICKEL	SHO331KBN	£193.00

Kolt Drench Head Shower Chrome

Kolt Drench Head Shower Brushed Brass

Kolt Drench Head Shower Matt Black

NEW

Hakk

Slide Rail Kit
& Wall Elbow

2 Outlet Concealed
Shower Valve

250mm Shower Head

Available in
4 finishes

200mm Ceiling
Mounted Arm

345mm Wall
Mounted Arm

Hakk Thermostatic Shower Kit 1

- 2 Outlet Concealed Shower Valve
- Slide Rail Kit and Wall Elbow
- 250mm Shower Head
- 345mm Wall Mounted Arm **OR** 200mm Ceiling Mounted Arm

	with Ceiling Arm	with Wall Arm	
CHROME	*USH0163*	*USH0162*	**£685.00**
MATT BLACK	*USH0165*	*USH0164*	**£785.00**
BRUSHED BRASS	*USH0167*	*USH0166*	**£785.00**
BRUSHED NICKEL	*USH0169*	*USH0168*	**£785.00**

Available in
4 finishes

Round Handset Kit

2 Outlet Concealed
Shower Valve

250mm Shower Head

Hakk Thermostatic Shower Kit 2

- 2 Outlet Concealed Shower Valve
- Round Handset Kit
- 250mm Shower Head
- 345mm Wall Mounted Arm **OR** 200mm Ceiling Mounted Arm

	with Ceiling Arm	with Wall Arm	
CHROME	*USH0171*	*USH0170*	**£685.00**
MATT BLACK	*USH0173*	*USH0172*	**£785.00**
BRUSHED BRASS	*USH0175*	*USH0174*	**£785.00**
BRUSHED NICKEL	*USH0177*	*USH0176*	**£785.00**

200mm Ceiling
Mounted Arm

345mm Wall
Mounted Arm

Alita

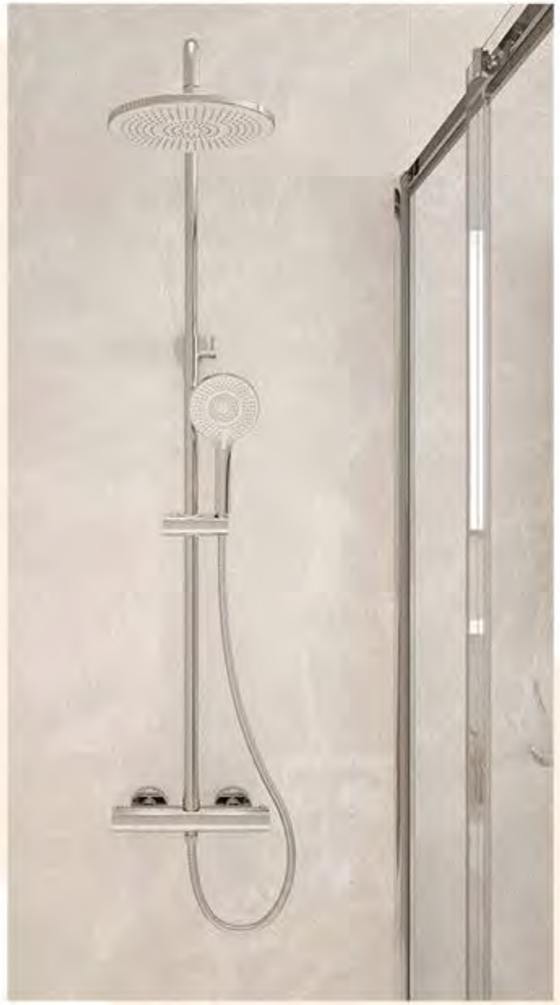

Brushed Nickel

Matt Black

Alita Round Rain Thermostatic Shower Kit

- 2 Function Thermostatic Shower Valve
- Cool Touch Technology
- Built-in Diverter
- Fast Fix Brackets Included
- 3 Function Handset
- 250mm Shower Head
- 1.5m Anti-twist Stainless Steel Hose
- Min Pressure: 0.5 bar

CHROME	*USH0024*	**£415.00**
MATT BLACK	*USH0025*	**£515.00**
BRUSHED BRASS	*USH0026*	**£515.00**
BRUSHED NICKEL	*USH0027*	**£515.00**

Brushed Brass

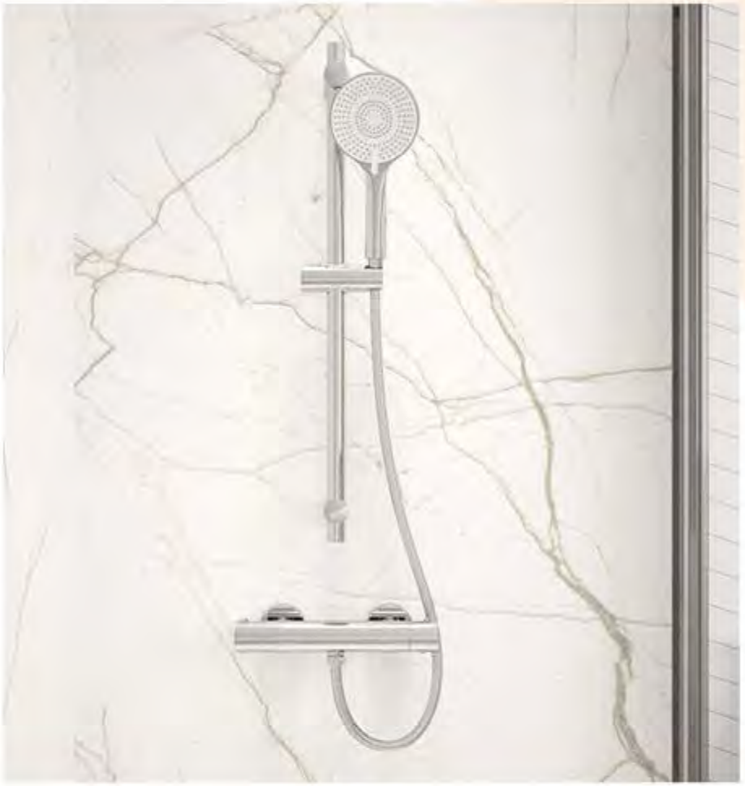

Alita Round Rain Thermostatic Bar Valve Kit

- Exposed Thermostatic Shower Valve
- Cool Touch Technology
- Round Slide Rail Kit
- Fast Fix Bracket Included
- 120mm 3 Function Handset
- 1.5m Anti-twist Stainless Steel Hose
- Min Pressure: 0.2 bar

CHROME	*USH0023*	**£240.00**

Alita Square Rain Thermostatic Shower Kit

- 2 Function Thermostatic Shower Valve
- Cool Touch Technology
- Built-in Diverter
- Fast Fix Brackets Included
- 3 Function Handset
- 250mm Shower Head
- 1.5m Anti-twist Stainless Steel Hose
- Min Pressure: 0.5 bar

CHROME	*USH0153*	**£495.00**

Chrome Brassware

Matt Black & Brushed Brass Brassware

WRAS APPROVED PRODUCT

BENKÉ

Rondo

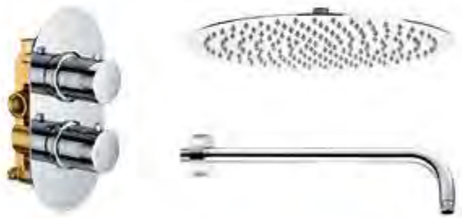

Available in 3 finishes

Rondo Shower Kit 1

- 250mm Stainless Slimline Shower Head
- 300mm Wall Arm
- 1 Function Concealed Thermostatic Valve

CHROME	*RONKIT1CP*	**£543.00**
MATT BLACK	*RONKIT9MB*	**£635.00**
BRUSHED BRASS	*RONKIT17BB*	**£766.00**

Available in 3 finishes

Rondo Shower Kit 2

- Slide Rail Kit
- Outlet Elbow
- 1 Function Concealed Thermostatic Valve

CHROME	*RONKIT2CP*	**£522.00**
MATT BLACK	*RONKIT10MB*	**£597.00**
BRUSHED BRASS	*RONKIT18BB*	**£777.00**

Available in 3 finishes

Rondo Shower Kit 3

- 250mm Stainless Slimline Shower Head
- 300mm Wall Arm
- Handset (with Hose, Wall Bracket & Outlet)
- 2 Function Concealed Thermostatic Diverter Valve

CHROME	*RONKIT3CP*	**£652.00**
MATT BLACK	*RONKIT11MB*	**£772.00**
BRUSHED BRASS	*RONKIT19BB*	**£938.00**

Available in 3 finishes

Rondo Shower Kit 4

- 250mm Stainless Slimline Shower Head
- 300mm Wall Arm
- Slide Rail Kit
- Outlet Elbow
- 2 Function Concealed Thermostatic Diverter Valve

CHROME	*RONKIT4CP*	**£722.00**
MATT BLACK	*RONKIT12MB*	**£815.00**
BRUSHED BRASS	*RONKIT20BB*	**£1084.00**

Plaza

Available in 3 finishes

Plaza Shower Kit 1

- 250mm Stainless Slimline Shower Head
- 300mm Wall Arm
- 1 Function Concealed Thermostatic Valve

CHROME	*PLAKIT5CP*	**£589.00**
MATT BLACK	*PLAKIT13MB*	**£661.00**
BRUSHED BRASS	*PLAKIT21BB*	**£784.00**

Available in 3 finishes

Plaza Shower Kit 2

- Slide Rail Kit
- Outlet Elbow
- 1 Function Concealed Thermostatic Valve

CHROME	*PLAKIT6CP*	**£519.00**
MATT BLACK	*PLAKIT14MB*	**£597.00**
BRUSHED BRASS	*PLAKIT22BB*	**£770.00**

Available in 3 finishes

Plaza Shower Kit 3

- 250mm Stainless Slimline Shower Head
- 300mm Wall Arm
- Handset (with Hose, Wall Bracket & Outlet)
- 2 Function Concealed Thermostatic Diverter Valve

CHROME	*PLAK7TCP*	**£702.00**
MATT BLACK	*PLAKIT15MB*	**£818.00**
BRUSHED BRASS	*PLAKIT23BB*	**£977.00**

Available in 3 finishes

Plaza Shower Kit 4

- 250mm Stainless Slimline Shower Head
- 300mm Wall Arm
- Slide Rail Kit
- Outlet Elbow
- 2 Function Concealed Thermostatic Diverter Valve

CHROME	*PLAKIT8CP*	**£766.00**
MATT BLACK	*PLAKIT16MB*	**£864.00**
BRUSHED BRASS	*PLAKIT24BB*	**£1120.00**

Chrome Brassware

Matt Black & Brushed Brass Brassware

WRAS APPROVED PRODUCT

BENKÉ

Concealed Valves

3 Control Valve in Gunmetal Only

Rondo *Plus* 1 Function Concealed Thermostatic Valve

CHROME	RON1CP	£394.00
MATT BLACK	RON1MB	£464.00
BRUSHED BRASS	RON1BB	£510.00
GUNMETAL	RON1GM	£510.00

Rondo *Plus* 2 Function Concealed Thermostatic Diverter Valve

CHROME	RON2CP	£445.00
MATT BLACK	RON2MB	£511.00
BRUSHED BRASS	RON2BB	£561.00
GUNMETAL	RON2GM	£601.00

Rondo *Plus* 3 Function Concealed Thermostatic Valve

CHROME	RON3CP	£544.00
MATT BLACK	RON3MB	£627.00
BRUSHED BRASS	RON3BB	£689.00

1 FUNCTION VALVE
Controls 1 outlet and adjusts temperature with the other.

2 FUNCTION DIVERTER
Controls 2 outlets from top and adjusts temperature with the other.

3 FUNCTION DIVERTER
Controls 2 outlets from top, adjusts temperature with middle and controls 3rd outlet from bottom.

Round Shower Head with Wall Arms

CHROME	SHO083DE	£103.00
MATT BLACK	RARMMB	£124.00

Plaza *Plus* 1 Function Concealed Thermostatic Valve

CHROME	PLA1CP	£394.00
MATT BLACK	PLA1MB	£453.00
BRUSHED BRASS	PLA1BB	£498.00

Plaza *Plus* 2 Function Concealed Thermostatic Valve

CHROME	PLA2CP	£445.00
MATT BLACK	PLA2MB	£511.00
BRUSHED BRASS	PLA2BB	£561.00

Plaza *Plus* 3 Function Concealed Thermostatic Diverter Valve

CHROME	PLA3CP	£544.00
MATT BLACK	PLA3MB	£627.00
BRUSHED BRASS	PLA3BB	£689.00

Square Shower Head with Wall Arms

CHROME	SHO073CU	£124.00
MATT BLACK	SQARMMB	£137.00

Available in 4 finishes

	200mm	250mm	300mm
CHROME	R20CP £63.00	R25CP £95.00	R30CP £152.00
MATT BLACK	R20MB £83.00	R25MB £95.00	
BRUSHED BRASS		R25BB £170.00	
GUNMETAL		R25GM £170.00	

Available in 3 finishes

	200mm	250mm	300mm
CHROME	S20CP £78.00	S25CP £122.00	S30CP £164.00
MATT BLACK	S20MB £88.00	S25MB £122.00	
BRUSHED BRASS		S25BB £196.00	

WRAS APPROVED PRODUCT

BENKÉ

Rossay & Sanday

1 FUNCTION VALVE
Controls 1 outlet and adjusts temperature with the other.

2 FUNCTION DIVERTER
Controls 2 outlets from top and adjusts temperature with the other.

3 FUNCTION DIVERTER
Controls 2 outlets from top, adjusts temperature with middle and controls 3rd outlet from bottom.

Rossay & Sanday Valves are Available in 3 finishes

10 Chrome Brassware

5 Matt Black & Brushed Brass Brassware

Rossay 1 Function Concealed Thermostatic Valve

NEW

CHROME	*ROS1CP*	**£394.00**
MATT BLACK	*ROS1MB*	**£464.00**
BRUSHED BRASS	*ROS1BR*	**£510.00**

Rossay 2 Function Concealed Thermostatic Valve

NEW

CHROME	*ROS2CP*	**£445.00**
MATT BLACK	*ROS2MB*	**£511.00**
BRUSHED BRASS	*ROS2BR*	**£561.00**

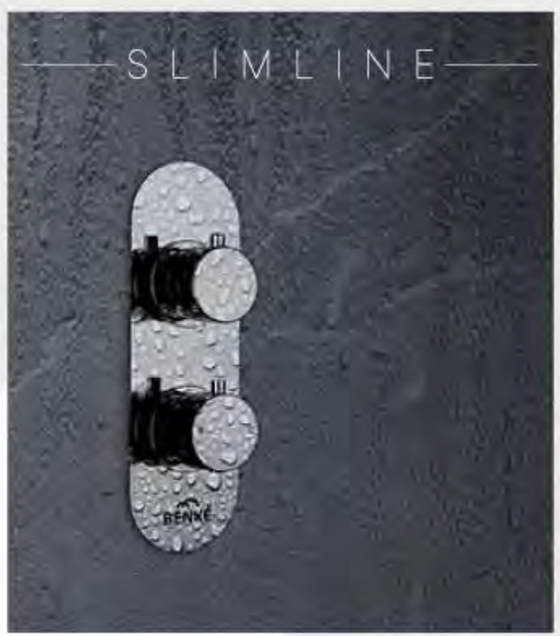

10 Chrome Brassware

5 Matt Black & Brushed Brass Brassware

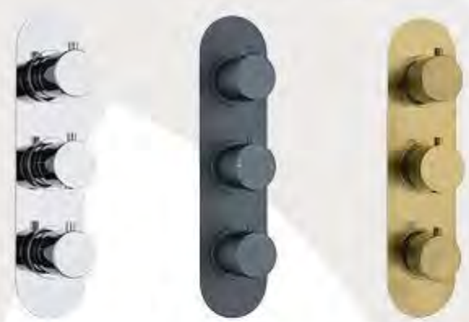

Rossay 3 Function Concealed Thermostatic Diverter Valve

NEW

CHROME	*ROS3CP*	**£544.00**
MATT BLACK	*ROS3MB*	**£627.00**
BRUSHED BRASS	*ROS3BR*	**£689.00**

10 Chrome Brassware

5 Matt Black & Brushed Brass Brassware

Sanday 1 Function Concealed Thermostatic Valve

NEW

CHROME	*SAN1CP*	**£394.00**
MATT BLACK	*SAN1MB*	**£453.00**
BRUSHED BRASS	*SAN1BR*	**£498.00**

10 Chrome Brassware

5 Matt Black & Brushed Brass Brassware

Sanday 2 Function Concealed Thermostatic Valve

NEW

CHROME	*SAN2CP*	**£445.00**
MATT BLACK	*SAN2MB*	**£511.00**
BRUSHED BRASS	*SAN2BR*	**£561.00**

SLIMLINE

Sanday 3 Function Concealed Thermostatic Diverter Valve

NEW

CHROME	*SAN3CP*	**£544.00**
MATT BLACK	*SAN3MB*	**£627.00**
BRUSHED BRASS	*SAN3BR*	**£689.00**

WRAS APPROVED PRODUCT

Rossay & Sanday

Chrome Brassware

Matt Black & Brushed Brass Brassware

Available in 3 finishes

Chrome Brassware

Matt Black & Brushed Brass Brassware

Available in 3 finishes

Rossay Slide Rail Kit

CHROME	*ROSSRCH*	**£94.00**
MATT BLACK	*ROSSRMB*	**£94.00**
BRUSHED BRASS	*ROSSRBR*	**£149.00**

Sanday Slide Rail Kit

CHROME	*SANSRCH*	**£92.00**
MATT BLACK	*SANSRMB*	**£106.00**
BRUSHED BRASS	*SANSRBR*	**£159.00**

Accessories

Chrome Brassware

Matt Black Brassware

For Shower Heads

SEE PAGES 230 & 231

Round Outlet Elbows

CHROME	*RECP*	**£35.00**
MATT BLACK	*REMB*	**£40.00**
BRUSHED BRASS	*REBB*	**£50.00**
GUNMETAL	*REGM*	**£50.00**

Square Outlet Elbows

CHROME	*SQECP*	**£35.00**
MATT BLACK	*SQEMB*	**£40.00**
BRUSHED BRASS	*SQEBB*	**£50.00**

Square Wall Arms (300mm)

CHROME	*SWACP*	**£74.00**
MATT BLACK	*SWAMB*	**£87.00**
BRUSHED BRASS	*SWABB*	**£91.00**

Square Ceiling Arms (120mm)

CHROME	*SCACP*	**£50.00**
MATT BLACK	*SCAMB*	**£56.00**
BRUSHED BRASS	*SCABB*	**£61.00**

Square Handsets

CHROME	*SQHCP*	**£63.00**
MATT BLACK	*SQHMB*	**£99.00**
BRUSHED BRASS	*SQHBB*	**£130.00**

Round Wall Arms (300mm)

CHROME	*RWACP*	**£56.00**
MATT BLACK	*RWAMB*	**£76.00**
BRUSHED BRASS	*RWABB*	**£87.00**
GUNMETAL	*RWAGM*	**£87.00**

Round Ceiling Arms (120mm)

CHROME	*RCACP*	**£44.00**
MATT BLACK	*RCAMB*	**£50.00**
BRUSHED BRASS	*RCABB*	**£56.00**
GUNMETAL	*RCAGM*	**£56.00**

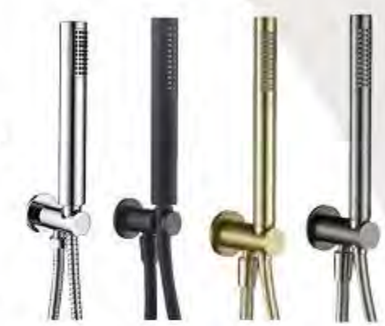

Round Handsets

CHROME	*RHCP*	**£58.00**
MATT BLACK	*RHMB*	**£91.00**
BRUSHED BRASS	*RHBB*	**£121.00**
GUNMETAL	*RHGM*	**£142.00**

Digital Valves

TOGO & VENN Series can be used with any shower fittings

Power Dial

Activate the flow by pressing the control dial. Once on, turn the dial to adjust the temperature. LED lights surrounding the control dial will change colour to indicate the current temperature setting.

When you have reached your desired temperature, press the dial. This will switch to the default outlet, which is represented by a new colour and a corresponding icon on the OLED digital display panel.

Cool Touch

Our advanced shower controls and trim plates are isolated from the water valve, ensuring they're always cool and safe to touch. Unlike traditional bar or thermostatic valves, none of our exposed components can scald you.

Automatic Safety Shutdown

If the water or power supply fails, the shower will turn off completely for your safety. This enhanced safety feature gives you complete reassurance.

Digital Display

Our innovative easy to read digital display accurately outputs the precise temperature and selected outlet. Simple, clear and highly responsive.

Easy Divert

TED TOGO and VENN shower valves have a diverter function for up to 3 outlets, providing the maximum showering flexibility. Changing between outlets is easy with icons clearly indicating your selection.

Venn 2 Outlet Processor & Square Interface

- 56mm buttons and digital screen
- Flow and temperature controls
- Timer setting
- Independent diverter buttons
- Landscape or portrait format
- Square brass backplate
- Switch between Fahrenheit and Celsius
- Operating pressure 1 bar

CHROME *VEN2-SQR-CH* **£1599.00**

Venn 3 Outlet Processor & Square Interface

- 56mm buttons and digital screen
- Flow and temperature controls
- Timer setting
- Independent diverter buttons
- Can use 2 outlets simultaneously
- Landscape or portrait format
- Square brass backplate
- Switch between farenheit and Celsius
- Operating pressure 1 bar

CHROME *VEN3-SQR-CH* **£1699.00**

Digital Valves

TOGO Oval Series

- Size: 190mm x 75mm
- Oval backplate
- Landscape or portrait format

CHROME	MATT BLACK	BRUSHED NICKEL	BRUSHED BRASS	GUNMETAL GREY	BRUSHED BRONZE	MATT WHITE
TOG-OVV-CH	*TOG-OVV-MB*	*TOG-OVV-BN*	*TOG-OVV-BB*	*TOG-OVV-GG*	*TOG-OVV-BR*	*TOG-OVV-MW*
£1299.00	**£1399.00**	**£1399.00**	**£1399.00**	**£1399.00**	**£1399.00**	**£1399.00**

TOGO Square Series

- Size: 195mm x 60mm
- Oval backplate
- Landscape or portrait format

CHROME	MATT BLACK	BRUSHED NICKEL	BRUSHED BRASS	GUNMETAL GREY	BRUSHED BRONZE	MATT WHITE
TOG-SQV-CH	*TOG-SQV-MB*	*TOG-SQV-BN*	*TOG-SQV-BB*	*TOG-SQV-GG*	*TOG-SQV-BR*	*TOG-SQV-MW*
£1299.00	**£1399.00**	**£1399.00**	**£1399.00**	**£1399.00**	**£1399.00**	**£1399.00**

TOGO Ring Series

- Individual dial size: 50mm x 50mm
- Circular Mini backplate
- Landscape or portrait format

CHROME	MATT BLACK	BRUSHED NICKEL	BRUSHED BRASS	GUNMETAL GREY	BRUSHED BRONZE	MATT WHITE
TOG-RING-CH	*TOG-RING-MB*	*TOG-RING-BN*	*TOG-RING-BB*	*TOG-RING-GG*	*TOG-RING-BR*	*TOG-RING-MW*
£1299.00	**£1399.00**	**£1399.00**	**£1399.00**	**£1399.00**	**£1399.00**	**£1399.00**

Can't find what you are looking for?

Scan the QR code to download the latest **TED** brochure and discover more exciting products and options.

TOGO Single Outlet Collection

- Single dial size: 50mm x 50mm
- Circular mini backplate

TOGO Single Series can be used with any shower fittings, bath or basin filler

The TOGO Series Single Outlet epitomises minimalist elegance, offering a refined and intuitive control experience.

Perfectly designed for single outlet showers, bath, or basin fillers, this advanced interface merges cutting-edge technology with effortless usability.

With the TOGO Series Single Outlet, your chosen temperature setting remains consistent, ensuring a safe and comfortable shower every time. Additionally, the TOGO Series Single Outlet prioritises your safety with its automatic shutdown feature, which activates in case of any water or power supply disruptions.

CHROME	MATT BLACK	BRUSHED NICKEL	BRUSHED BRASS	GUNMETAL GREY	BRUSHED BRONZE	MATT WHITE
TOG-SIN-CH	*TOG-SIN-MB*	*TOG-SIN-BN*	*TOG-SIN-BB*	*TOG-SIN-GG*	*TOG-SIN-BR*	*TOG-SIN-MW*
£899.00	**£999.00**	**£999.00**	**£999.00**	**£999.00**	**£999.00**	**£999.00**

TOGO Wireless Buttons

- Single button size: 45mm x 45mm

TOGO Wireless Buttons are compatible with all TOGO Series interfaces

Elevate your daily shower experience with our advanced wireless control system. Manage your shower effortlessly from up to 7 meters away, ensuring a perfectly warm and inviting shower every time.

Our innovative wireless button is self-charging and operates without the need for external power or complex installation. This ensures seamless integration into your bathroom without any disruption.

With a simple press, the button initiates water delivery at a default temperature of 38°C.

For added style and coordination, our wireless button is available in seven exquisite finishes. Each finish is designed to perfectly complement your chosen TOGO Series interface, blending elegance with unparalleled functionality.

CHROME	MATT BLACK	BRUSHED NICKEL	BRUSHED BRASS	GUNMETAL GREY	BRUSHED BRONZE	MATT WHITE
TOG-REM-CH	*TOG-REM-MB*	*TOG-REM-BN*	*TOG-REM-BB*	*TOG-REM-GG*	*TOG-REM-BR*	*TOG-REM-MW*
£149.00	**£159.00**	**£159.00**	**£159.00**	**£159.00**	**£159.00**	**£159.00**

BRASSWARE

Armstrong

10 Chrome Brassware

5 Matt Black & Brushed Brass Brassware

Mono Basin Mixer with Click Waste

CHROME	*TAP05ARM*	**£142.00**
MATT BLACK	*TAP05ARMB*	**£169.00**
BRUSHED BRASS	*TAP05ARMBR*	**£191.00**
GUNMETAL	*TAP05ARMGM*	**£191.00**

Mini Mono Basin Mixer with Click Waste

CHROME	*TAP07ARM*	**£130.00**
MATT BLACK	*TAP07ARMB*	**£159.00**
BRUSHED BRASS	*TAP07ARMBR*	**£180.00**
GUNMETAL	*TAP07ARMGM*	**£180.00**

High Rise Mono Basin Mixer

CHROME	*TAP08ARM*	**£252.00**
MATT BLACK	*TAP08ARMB*	**£288.00**
BRUSHED BRASS	*TAP08ARMBR*	**£309.00**
GUNMETAL	*TAP08ARMGM*	**£309.00**

Bath Filler

CHROME	*TAP03ARM*	**£215.00**
MATT BLACK	*TAP03ARMB*	**£245.00**
BRUSHED BRASS	*TAP03ARMBR*	**£267.00**
GUNMETAL	*TAP03ARMGM*	**£267.00**

3 Hole Bath Shower Mixer

CHROME	
TAP14ARM	
£286.00	

Wall Mounted Bath Filler

CHROME	
TAP18ARM	
£170.00	

3 Hole Bath Filler

CHROME	
TAP15ARM	
£272.00	

Bath Shower Mixer

CHROME	*TAP04ARM*	**£260.00**
MATT BLACK	*TAP04ARMB*	**£289.00**
BRUSHED BRASS	*TAP04ARMBR*	**£327.00**
GUNMETAL	*TAP04ARMGM*	**£327.00**

Free Standing Bath Shower Mixer

CHROME	*TAP88ARM*	**£631.00**
MATT BLACK	*TAP88ARMB*	**£688.00**
BRUSHED BRASS	*TAP88ARMBR*	**£710.00**
GUNMETAL	*TAP88ARMGM*	**£710.00**

10 Chrome Brassware

5 Matt Black Brassware

Gordon

Chrome Brassware

Matt Black & Brushed Brass Brassware

Mono Basin Mixer with Click Waste

CHROME	*TAP05GOR*	**£135.00**
MATT BLACK	*TAP05GORB*	**£156.00**
BRUSHED BRASS	*TAP05GORBR*	**£178.00**
GUNMETAL	*TAP05GORGM*	**£178.00**

High Rise Mono Basin Mixer

CHROME	*TAP08GOR*	**£229.00**
MATT BLACK	*TAP08GORB*	**£275.00**
BRUSHED BRASS	*TAP08GORBR*	**£297.00**
GUNMETAL	*TAP08GORGM*	**£297.00**

Bath Filler

CHROME	*TAP03GOR*	**£193.00**
MATT BLACK	*TAP03GORB*	**£288.00**
BRUSHED BRASS	*TAP03GORBR*	**£274.00**
GUNMETAL	*TAP03GORGM*	**£274.00**

Bath Shower Mixer

CHROME	*TAP04GOR*	**£222.00**
MATT BLACK	*TAP04GORB*	**£252.00**
BRUSHED BRASS	*TAP04GORBR*	**£309.00**
GUNMETAL	*TAP04GORGM*	**£309.00**

Free Standing Bath Shower Mixer

CHROME	*TAP88GOR*	**£528.00**
MATT BLACK	*TAP88GORB*	**£612.00**
BRUSHED BRASS	*TAP88GORBR*	**£634.00**
GUNMETAL	*TAP88GORGM*	**£634.00**

Chrome Brassware

Matt Black Brassware

Brushed Brass finish DOES NOT include easy-fix kit

Wall Mounted Basin Mixer

CHROME with EASY FIT	*TAP18GOR*	**£273.00**
MATT BLACK with EASY FIT	*TAP18GORB*	**£295.00**
BRUSHED BRASS	*TAP18GORBR*	**£327.00**

Bell

Chrome Brassware

Matt Black & Brushed Brass Brassware

Mini Mono Basin Mixer with Click Waste

CHROME	*TAP07BEL*	**£103.00**
MATT BLACK	*TAP07BELB*	**£116.00**
BRUSHED BRASS	*TAP07BELBR*	**£130.00**

Mono Basin Mixer with Click Waste

CHROME	*TAP05BEL*	**£130.00**
MATT BLACK	*TAP05BELB*	**£145.00**
BRUSHED BRASS	*TAP05BELBR*	**£169.00**

High Rise Mono Basin Mixer

CHROME	*TAP08BEL*	**£229.00**
MATT BLACK	*TAP08BELB*	**£247.00**
BRUSHED BRASS	*TAP08BELBR*	**£301.00**

Bath Filler

CHROME	*TAP03BEL*	**£201.00**
MATT BLACK	*TAP03BELB*	**£228.00**
BRUSHED BRASS	*TAP03BELBR*	**£252.00**

Bath Shower Mixer

CHROME	*TAP04BEL*	**£211.00**
MATT BLACK	*TAP04BELB*	**£238.00**
BRUSHED BRASS	*TAP04BELBR*	**£263.00**

Chrome Brassware

Matt Black Brassware

Fairlie

10 Chrome Brassware

5 Matt Black & Brushed Brass Brassware

Mono Basin Mixer with Click Waste

CHROME	*TAP05FAI*	**£121.00**
MATT BLACK	*TAP05FAIB*	**£135.00**
BRUSHED BRASS	*TAP05FAIBR*	**£159.00**

High Rise Mono Basin Mixer

CHROME	*TAP08FAI*	**£202.00**
MATT BLACK	*TAP08FAIB*	**£273.00**

Bath Filler

CHROME	*TAP03FAI*	**£223.00**
MATT BLACK	*TAP03FAIB*	**£250.00**
BRUSHED BRASS	*TAP03FAIBR*	**£276.00**

Bath Shower Mixer

CHROME	*TAP04FAI*	**£251.00**
MATT BLACK	*TAP04FAIB*	**£279.00**

Lawrie

NEW

10 Chrome Brassware

5 Matt Black Brassware

Mono Basin Mixer with Click Waste

CHROME	*TAP05LAI*	**£135.00**
MATT BLACK	*TAP05LAIB*	**£156.00**
BRUSHED BRASS	*TAP05LAIBR*	**£178.00**

Bath Filler

CHROME	*TAP03LAI*	**£193.00**
MATT BLACK	*TAP03LAIB*	**£249.00**
BRUSHED BRASS	*TAP03LAIBR*	**£269.00**

High Rise Mono Basin Mixer

CHROME	*TAP08LAI*	**£229.00**
MATT BLACK	*TAP08LAIB*	**£269.00**
BRUSHED BRASS	*TAP08LAIBR*	**£289.00**

Hakk

NEW 15

Basin Mixer

CHROME	*UBR0182*	**£185.00**
MATT BLACK	*UBR0183*	**£195.00**
BRUSHED BRASS	*UBR0184*	**£195.00**
BRUSHED NICKEL	*UBR0185*	**£195.00**

Available in 4 finishes

NEW 15

Freestanding Basin Mixer

CHROME	*UBR0187*	**£235.00**
MATT BLACK	*UBR0188*	**£285.00**
BRUSHED BRASS	*UBR0189*	**£285.00**
BRUSHED NICKEL	*UBR0190*	**£285.00**

NEW 15

Wall Mounted Basin Mixer

CHROME	*UBR0192*	**£195.00**
MATT BLACK	*UBR0193*	**£250.00**
BRUSHED BRASS	*UBR0194*	**£250.00**
BRUSHED NICKEL	*UBR0195*	**£250.00**

NEW 15

Concealed Thermostatic Bath Shower Mixer

CHROME	*USH0223*	**£450.00**
MATT BLACK	*USH0224*	**£540.00**
BRUSHED BRASS	*USH0225*	**£540.00**
BRUSHED NICKEL	*USH0226*	**£540.00**

Hakk Basin Mixer
Brushed Nickel

Hakk Basin Mixer
Matt Black

Hakk Wall Mounted
Bath Shower Mixer
Brushed Nickel

Alita

Available in 4 finishes

NEW 15

Basin Mixer

CHROME	UBR0119	£185.00
MATT BLACK	UBR0120	£195.00
BRUSHED BRASS	UBR0122	£195.00
BRUSHED NICKEL	UBR0121	£195.00

NEW 15

Freestanding Basin Mixer

CHROME	UBR0123	£235.00
MATT BLACK	UBR0124	£285.00
BRUSHED BRASS	UBR0126	£285.00
BRUSHED NICKEL	UBR0125	£285.00

NEW 15

Wall Mounted Basin Mixer

CHROME	UBR0127	£195.00
MATT BLACK	UBR0128	£250.00
BRUSHED BRASS	UBR0130	£250.00
BRUSHED NICKEL	UBR0129	£250.00

NEW 15

Bath Filler

CHROME	UBR0197	£330.00
MATT BLACK	UBR0198	£355.00
BRUSHED BRASS	UBR0199	£355.00
BRUSHED NICKEL	UBR0200	£355.00

NEW 15

Floorstanding Bath Shower Mixer

CHROME	UBR0146	£895.00
BRUSHED BRASS	UBR0147	£1045.00
MATT BLACK	UBR0149	£1045.00
BRUSHED NICKEL	UBR0148	£1045.00

NEW 15

Bath Shower Mixer

CHROME	UBR0201	£385.00
BRUSHED BRASS	UBR0202	£405.00
MATT BLACK	UBR0203	£405.00
BRUSHED NICKEL	UBR0204	£405.00

Alita Wall Mounted Basin Mixer Brushed Nickel

Alita Floorstanding Bath Shower Mixer Matt Black

Alita Basin Mixers Matt Black, Brushed Brass and Brushed Nickel

Pitcairn

Mono Basin Mixer with Click Waste

CHROME *TAP05PIT* **£127.00**

Mini Mono Basin Mixer with Click Waste

CHROME *TAP07PIT* **£127.00**

High Rise Mono Basin Mixer

CHROME *TAP08PIT* **£226.00**

Bath Filler

CHROME *TAP03PIT* **£225.00**

Muir

Mono Basin Mixer with Click Waste

CHROME *TAP05MUI* **£106.00**

Mini Mono Basin Mixer with Click Waste

CHROME *TAP07MUI* **£102.00**

Bath Filler

CHROME *TAP03MUI* **£158.00**

Kerr

Mono Basin Mixer with Click Waste

CHROME *TAP05KER* **£68.00**

Bath Filler

CHROME *TAP03KER* **£109.00**

Kennedy

Mono Basin Mixer with Click Waste

CHROME *TAP05KEN* **£113.00**

Bath Taps (Pair)

CHROME *TAP01KEN* **£120.00**

Basin Taps (Pair)

CHROME *TAP02KEN* **£85.00**

Bath Filler

CHROME *TAP03KEN* **£170.00**

Bath Shower Mixer

CHROME *TAP04KEN* **£251.00**

Hunter

Mini Mono Basin Mixer with Click Waste

CHROME *TAP07HUN* **£119.00**

Mono Basin Mixer with Click Waste

CHROME *TAP05HUN* **£127.00**

Bath Filler

CHROME *TAP03HUN* **£225.00**

Erskine

Mono Basin Mixer with Click Waste

CHROME *TAP05ERS* **£135.00**

Bath Filler

CHROME *TAP03ERS* **£193.00**

Pringle

Mono Basin Mixer with Click Waste

CHROME *TAP05PRI* **£106.00**

High Rise Mono Basin Mixer

CHROME *TAP08PRI* **£120.00**

Bath Filler

CHROME *TAP03PRI* **£149.00**

Bath Shower Mixer

CHROME *TAP04PRI* **£191.00**

Kolt

NEW

Mono Basin Mixer with Click Waste

BRUSHED NICKEL *TAP05KBN* **£129.00**

NEW

Mini Mono Basin Mixer with Click Waste

BRUSHED NICKEL *TAP07KBN* **£124.00**

NEW

High Rise Mono Basin Mixer

BRUSHED NICKEL *TAP08KBN* **£205.00**

NEW

Bath Filler

BRUSHED NICKEL *TAP03KBN* **£248.00**

NEW

Bath Shower Mixer

BRUSHED NICKEL *TAP04KBN* **£309.00**

Accessories

Minimal square and rounded designs for an elegant, final touch to your bathroom.

10 Chrome Brassware

5 Matt Black & Brushed Brass Brassware

Round Towel Ring

CHROME	CHECPTRI	£64.00
MATT BLACK	CHEMBTRI	£64.00
BRUSHED BRASS	CHEBBTRI	£75.00

Square Towel Ring

CHROME	HECPTRI	£64.00
MATT BLACK	HEMBTRI	£64.00
BRUSHED BRASS	HEBBTRI	£75.00

Round Toilet Roll Holder

CHROME	CHECPTRHO	£54.00
MATT BLACK	CHEMBTRHO	£54.00
BRUSHED BRASS	CHEBBTRHO	£64.00

Square Toilet Roll Holder

CHROME	HECPTRHO	£54.00
MATT BLACK	HEMBTRHO	£54.00
BRUSHED BRASS	HEBBTRHO	£64.00

Round Robe Hook

CHROME	CHECPDRH	£32.00
MATT BLACK	CHEMBDRH	£32.00
BRUSHED BRASS	CHEBBDRH	£40.00

Square Robe Hook

CHROME	HECPDRH	£32.00
MATT BLACK	HEMBDRH	£32.00
BRUSHED BRASS	HEBBDRH	£40.00

NEW

Premium Towel Bar

CHROME	ACC301	£83.00
BRUSHED BRASS	ACC331	£99.00
MATT BLACK	ACC311	£99.00
BRUSHED NICKEL	ACC321	£99.00

NEW

Premium Toilet Roll Holder

CHROME	ACC302	£45.00
BRUSHED BRASS	ACC332	£62.00
MATT BLACK	ACC312	£62.00
BRUSHED NICKEL	ACC322	£62.00

NEW

Premium Towel Ring

CHROME	ACC303	£50.00
BRUSHED BRASS	ACC333	£62.00
MATT BLACK	ACC313	£62.00
BRUSHED NICKEL	ACC323	£62.00

NEW

Premium Robe Hook

CHROME	ACC304	£35.50
MATT BLACK	ACC314	£46.00
BRUSHED BRASS	ACC334	£46.00

A grab bar lets you use your bathroom with comfort and confidence without compromising on style.

Our sturdy yet stylish corner baskets are perfect for keeping your showering area clutter free.

Grab Bar & Double Basket

GRAB BAR (300MM)	GB68	£62.00
BASKET	WB31	£125.00

NEW

Corner Basket

CHROME	WB28	£85.00
MATT BLACK	WB28K	£108.00
BRUSHED BRASS	WB28BB	£120.00

Hakk

Available in 4 finishes

NEW

Toilet Roll Holder

CHROME	UA0109	£70.00
MATT BLACK	UA0110	£80.00
BRUSHED BRASS	UA0111	£80.00
BRUSHED NICKEL	UA0112	£80.00

NEW

Toothbrush Holder

CHROME	UA0104	£65.00
MATT BLACK	UA0105	£80.00
BRUSHED BRASS	UA0106	£80.00
BRUSHED NICKEL	UA0107	£80.00

NEW

Towel Ring

CHROME	UA0114	£70.00
MATT BLACK	UA0115	£80.00
BRUSHED BRASS	UA0116	£80.00
BRUSHED NICKEL	UA0117	£80.00

NEW

Towel Rail (45cm)

CHROME	UA0119	£95.00
MATT BLACK	UA0120	£110.00
BRUSHED BRASS	UA0121	£110.00
BRUSHED NICKEL	UA0122	£110.00

NEW

Robe Hook

CHROME	UA0124	£45.00
MATT BLACK	UA0125	£50.00
BRUSHED BRASS	UA0126	£50.00
BRUSHED NICKEL	UA0127	£50.00

Alita

Available in 4 finishes

NEW

Towel Holder

CHROME	UA0080	£75.00
MATT BLACK	UA0081	£80.00
BRUSHED BRASS	UA0082	£80.00
BRUSHED NICKEL	UA0083	£80.00

NEW

Toothbrush Holder

CHROME	UA0088	£65.00
MATT BLACK	UA0089	£80.00
BRUSHED BRASS	UA0090	£80.00
BRUSHED NICKEL	UA0091	£80.00

NEW

Toilet Roll Holder

CHROME	UA0076	£70.00
MATT BLACK	UA0077	£80.00
BRUSHED BRASS	UA0078	£80.00
BRUSHED NICKEL	UA0079	£80.00

NEW

Robe Hook

CHROME	UA0072	£45.00
MATT BLACK	UA0073	£50.00
BRUSHED BRASS	UA0074	£50.00
BRUSHED NICKEL	UA0075	£50.00

NEW

Towel Rail (450mm)

CHROME	UA0084	£95.00
MATT BLACK	UA0085	£110.00
BRUSHED BRASS	UA0086	£110.00
BRUSHED NICKEL	UA0087	£110.00

HEATING

Dorado

Matt Black

Matt Anthracite

Brushed Brass

Dorado Towel Rails

	Size (mm)	Tapping Centres	Output (BTU)	Code	
CHROME	H1200 x W500	450	1491	*DOR1250CP*	**£601.00**
MATT BLACK	H1200 x W500	450	2216	*DOR1250MB*	**£436.00**
BRUSHED BRASS	H1200 x W500	450	1491	*DOR1250BB*	**£688.00**
BRUSHED BRASS	H800 x W500	450	994	*DOR0850BB*	**£556.00**
MATT ANTHRACITE	H1200 x W500	450	2216	*DOR1250AN*	**£436.00**

Chrome

Sail

Matt Anthracite

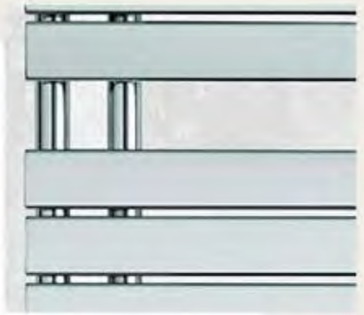

Chrome

Matt Black

Sail Towel Rails

	Size (mm)	Tapping Centres	Output (BTU)	Code	
BRUSHED BRASS	H1080 x W550	80	1273	*SAI1080BB*	**£688.00**
CHROME	H1080 x W550	80	1273	*SAI1080CP*	**£601.00**
MATT BLACK	H1080 x W550	80	1884	*SAI1080MB*	**£470.00**
ANTHRACITE	H1080 x W550	80	1884	*SAI1080AN*	**£470.00**

Square

Square Towel Rails

	Size (mm)	Tapping Centres	Output (BTU)	Code	
CHROME	H800 x W500	455	1310	*SQR508C*	**£222.00**
CHROME	H800 x W600	555	1520	*SQR608C*	**£250.00**
CHROME	H1200 x W500	455	1910	*SQR512C*	**£306.00**
CHROME	H1200 x W600	555	2200	*SQR612C*	**£334.00**
CHROME	H1600 x W500	455	2495	*SQR516C*	**£390.00**
CHROME	H1600 x W600	555	2890	*SQR616C*	**£432.00**

Abbotsford

Textured Black

Textured White

Abbotsford Towel Rails

	Size (mm)	Tapping Centres	Output (BTU)	Code	
TEXTURED WHITE	H600 x W455	455	1217	*ALTW-4-506-WT*	**£310.00**
TEXTURED WHITE	H1000 x W455	455	1826	*ALTW-4-510-WT*	**£467.00**
TEXTURED WHITE	H1350 x W455	455	2435	*ALTW-4-513-WT*	**£635.00**
TEXTURED BLACK	H600 x W500	455	1217	*ALTW-4-506-BK*	**£325.00**
TEXTURED BLACK	H1000 x W500	455	1826	*ALTW-4-510-BK*	**£490.00**
TEXTURED BLACK	H1350 x W500	455	2435	*ALTW-4-513-BK*	**£668.00**

Allegro

Textured White

Allegro Vertical Rail (Single)

	Size (mm)	Tapping Centres	Output (BTU)	Code	
TEXTURED WHITE	H1775 x W280	280	2741	*ALRAD-16-1803-WT*	**£499.00**
TEXTURED WHITE	H1775 x W375	375	3655	*ALRAD-16-1804-WT*	**£645.00**
TEXTURED WHITE	H1775 x W470	470	4569	*ALRAD-16-1805-WT*	**£791.00**
TEXTURED WHITE	H1775 x W565	565	5483	*ALRAD-16-1806-WT*	**£937.00**

Allegro Vertical Rail (Double)

	Size (mm)	Tapping Centres	Output (BTU)	Code	
TEXTURED WHITE	H1775 x W280	280	3785	*ALRAD-17-1803-WT*	**£662.00**
TEXTURED WHITE	H1775 x W375	375	5047	*ALRAD-17-1804-WT*	**£860.00**
TEXTURED WHITE	H1775 x W470	470	6039	*ALRAD-17-1805-WT*	**£1058.00**
TEXTURED WHITE	H1775 x W565	565	7571	*ALRAD-17-1806-WT*	**£1255.00**

Allegro Vertical Rail (Single)

	Size (mm)	Tapping Centres	Output (BTU)	Code	
TEXTURED GREY	H1775 x W280	280	3625	*ALRAD-16-1803-GY*	**£514.00**
TEXTURED GREY	H1775 x W375	375	4834	*ALRAD-16-1804-GY*	**£664.00**
TEXTURED GREY	H1775 x W470	470	6040	*ALRAD-16-1805-GY*	**£815.00**
TEXTURED GREY	H1775 x W565	565	7250	*ALRAD-16-1806-GY*	**£965.00**

Textured Grey

Allegro Vertical Rail (Double)

	Size (mm)	Tapping Centres	Output (BTU)	Code	
TEXTURED GREY	H1775 x W280	280	5583	*ALRAD-17-1803-GY*	**£682.00**
TEXTURED GREY	H1775 x W375	375	7443	*ALRAD-17-1804-GY*	**£886.00**
TEXTURED GREY	H1775 x W470	470	9302	*ALRAD-17-1805-GY*	**£1089.00**
TEXTURED GREY	H1775 x W565	565	11164	*ALRAD-17-1806-GY*	**£1292.00**

Boston

Gloss White

Matt Anthracite

Boston Column Radiator

	Size (mm)	Tapping Centres	Output (BTU)	Code	
GLOSS WHITE	H1600 x W410	370	3240	*BOS1600-410W*	**£316.00**
GLOSS WHITE	H1600 x W480	440	3781	*BOS1600-480W*	**£364.00**
GLOSS WHITE	H1600 x W550	510	4322	*BOS1600-550W*	**£407.00**
GLOSS WHITE	H1800 x W410	370	3616	*BOS1800-410W*	**£343.00**
GLOSS WHITE	H1800 x W480	440	4219	*BOS1800-480W*	**£394.00**
GLOSS WHITE	H1800 x W550	510	4823	*BOS1800-550W*	**£439.00**
MATT ANTHRACITE	H1600 x W410	370	3240	*BOS1600-410A*	**£328.00**
MATT ANTHRACITE	H1600 x W480	440	3781	*BOS1600-480A*	**£378.00**
MATT ANTHRACITE	H1600 x W550	510	4322	*BOS1600-550A*	**£423.00**
MATT ANTHRACITE	H1800 x W410	370	3616	*BOS1800-410A*	**£355.00**
MATT ANTHRACITE	H1800 x W480	440	4219	*BOS1800-480A*	**£409.00**
MATT ANTHRACITE	H1800 x W550	510	4823	*BOS1800-550A*	**£455.00**

Capri

Electric amazon alexa Google Home

Control Panel

Matt Anthracite

Gloss White

Capri Electric Vertical Rail (Single)

	Size (mm)	Wattage	Code	
GLOSS WHITE	H1600 X W362	1000	*CAP1600-362W*	**£510.00**
GLOSS WHITE	H1600X W453	1500	*CAP1600-453W*	**£600.00**
GLOSS WHITE	H1600 X W544	2000	*CAP1600-544W*	**£690.00**
MATT ANTHRACITE	H1600 X W362	1000	*CAP1600-362A*	**£528.00**
MATT ANTHRACITE	H1600X W453	1500	*CAP1800-453A*	**£624.00**
MATT ANTHRACITE	H1600 X W544	2000	*CAP1600-544A*	**£720.00**

22mm Ladder Rails

Matt Anthracite

Chrome

Electric

Matt Black

Gloss White

22mm Ladder Rails

	Size (mm)	Tapping Centres	Output (BTU)	Code	
CHROME	H800 X W400	355	1100	STR408C	£94.00
CHROME	H1000 X W400	355	1311	STR410C	£110.00
CHROME	H1200 X W400	355	1595	STR412C	£123.00
CHROME	H1600 X W400	355	2108	STR416C	£151.00
CHROME	H800 X W500	455	1302	STR508C	£101.00
CHROME	H1000 X W500	455	1540	STR510C	£120.00
CHROME	H1200 X W500	455	1881	STR512C	£135.00
CHROME	H1600 X W500	455	2484	STR516C	£165.00
CHROME	H1800 X W500	455	2855	STR518C	£208.00
CHROME	H800 X W600	555	1509	STR608C	£108.00
CHROME	H1000 X W600	555	1781	STR610C	£125.00
CHROME	H1200 X W600	555	2182	STR612C	£144.00
CHROME	H1600 X W600	555	2881	STR616C	£176.00
CHROME	H1800 X W600	555	3312	STR618C	£227.00
MATT BLACK	H800 X W400	355	1567	STR408B	£135.00
MATT BLACK	H1000 X W400	355	1868	STR410B	£158.00
MATT BLACK	H1200 X W400	355	2274	STR412B	£175.00
MATT BLACK	H1600 X W400	355	3006	STR416B	£214.00
MATT BLACK	H800 X W500	455	1856	STR508B	£145.00
MATT BLACK	H1000 X W500	455	2194	STR510B	£167.00
MATT BLACK	H1200 X W500	455	2680	STR512B	£203.00
MATT BLACK	H1600 X W500	455	3540	STR516B	£234.00
MATT BLACK	H800 X W600	555	2151	STR608B	£155.00
MATT BLACK	H1000 X W600	555	2538	STR610B	£178.00
MATT BLACK	H1200 X W600	555	3109	STR612B	£209.00
MATT BLACK	H1600 X W600	555	4105	STR616B	£250.00
ANTHRACITE	H800 X W400	355	1567	STR408A	£135.00
ANTHRACITE	H1000 X W400	355	1868	STR410A	£158.00
ANTHRACITE	H1200 X W400	355	2274	STR412A	£175.00
ANTHRACITE	H1600 X W400	355	3006	STR416A	£214.00
ANTHRACITE	H800 X W500	455	1856	STR508A	£145.00
ANTHRACITE	H1000 X W500	455	2194	STR510A	£167.00
ANTHRACITE	H1200 X W500	455	2680	STR512A	£203.00
ANTHRACITE	H1600 X W500	455	3540	STR516A	£234.00
ANTHRACITE	H800 X W600	555	2151	STR608A	£155.00
ANTHRACITE	H1000 X W600	555	2538	STR610A	£178.00
ANTHRACITE	H1200 X W600	555	3109	STR612A	£209.00
ANTHRACITE	H1600 X W600	555	4105	STR616A	£250.00
BRUSHED BRASS	H800 X W500	455	1302	STR508BRASS	£159.00
BRUSHED BRASS	H1200 X W500	455	1881	STR512BRASS	£199.00
BRUSHED BRASS	H1600 X W500	455	2881	STR516BRASS	£299.00
GLOSS WHITE	H800 X W500	455	1856	STR508W	£70.00
GLOSS WHITE	H1200 X W500	455	2194	STR510W	£76.00
GLOSS WHITE	H1600 X W500	455	2680	STR512W	£93.00
ELECTRIC CHROME	H800 X W500	455	150W	ESTR508C	£225.00
ELECTRIC CHROME	H1000 X W500	455	200W	ESTR510C	£259.00
ELECTRIC CHROME	H1200 X W500	455	300W	ESTR512C	£293.00

25mm Ladder Rails

25mm Ladder Rails

	Size (mm)	Tapping Centres	Output (BTU)	Code	
CHROME	H800 X W500	455	1506	*25STR508C*	**£132.00**
CHROME	H1000 X W500	455	1781	*25STR510C*	**£146.00**
CHROME	H1200 X W500	455	2175	*25STR512C*	**£160.00**
CHROME	H1600 X W500	455	2873	*25STR516C*	**£188.00**
CHROME	H800 X W600	555	1746	*25STR608C*	**£137.00**
CHROME	H1000 X W600	555	2060	*25STR610C*	**£151.00**
CHROME	H1200 X W600	555	2524	*25STR612C*	**£164.00**
CHROME	H1600 X W600	555	3332	*25STR616C*	**£206.00**

Alberta

Matt Bronze

Textured Grey

Textured Black

Alberta Towel Rails

	Size (mm)	Tapping Centres (mm)	Output (BTU)	Sections	Code	
TEXTURED GREY	H800 x W500 x D43	455	1030	6	*ALTWL-13-508-GY*	**£610.00**
TEXTURED GREY	H1200 x W500 x D43	455	1456	8	*ALTWL-13-512-GY*	**£827.00**
TEXTURED GREY	H1600 x W500 x D43	455	1882	10	*ALTWL-13-516-GY*	**£1033.00**
TEXTURED BLACK	H800 x W500 x D43	455	1030	6	*ALTWL-13-508-BK*	**£623.00**
TEXTURED BLACK	H1200 x W500 x D43	455	1456	8	*ALTWL-13-512-BK*	**£824.00**
TEXTURED BLACK	H1600 x W500 x D43	455	1882	10	*ALTWL-13-516-BK*	**£1052.00**
MATT BRONZE	H800 x W500 x D43	455	1030	6	*ALTWL-13-508-BZ*	**£650.00**
MATT BRONZE	H1200 x W500 x D43	455	1456	8	*ALTWL-13-512-BZ*	**£883.00**
MATT BRONZE	H1600 x W500 x D43	455	1882	10	*ALTWL-13-516-BZ*	**£1103.00**

Canmore

Textured Grey

Textured Black

Canmore Towel Rails

	Size (mm)	Tapping Centres (mm)	Output (BTU)	Sections	Code	
TEXTURED GREY	H608 x W500 x D31	455	973	4	*ALTWL-6-506-GY*	**£320.00**
TEXTURED GREY	H992 x W500 x D31	455	1459	6	*ALTWL-6-510-GY*	**£475.00**
TEXTURED GREY	H1376 x W500 x D31	455	1945	8	*ALTWL-6-514-GY*	**£647.00**
TEXTURED GREY	H1760 x W500 x D31	455	2432	10	*ALTWL-6-518-GY*	**£797.00**
TEXTURED BLACK	H608 x W500 x D31	455	973	4	*ALTWL-6-506-BK*	**£328.00**
TEXTURED BLACK	H992 x W500 x D31	455	1459	6	*ALTWL-6-510-BK*	**£485.00**
TEXTURED GREY	H1376 x W500 x D31	455	1945	8	*ALTWL-6-514-BK*	**£660.00**
TEXTURED GREY	H1760 x W500 x D31	455	2432	10	*ALTWL-6-518-BK*	**£812.00**

Manitoba

Textured White

Textured Black

Matt Bronze

Textured Grey

Manitoba Towel Rails

	Size (mm)	Tapping Centres (mm)	Output (BTU)	Sections	Code	
TEXTURED WHITE	H250 X W450 X D40	50	450	3	*ALTWL-16-503-WT*	**£257.00**
TEXTURED WHITE	H540 X W450 X D40	50	900	6	*ALTWL-16-506-WT*	**£395.00**
TEXTURED WHITE	H250 X W450 X D40	50	1350	9	*ALTWL-16-509-WT*	**£535.00**
TEXTURED WHITE	H1120 X W450 X D40	50	1800	12	*ALTWL-16-512-WT*	**£673.00**
TEXTURED WHITE	H1410 X W450 X D40	50	2476	15	*ALTWL-16-515-WT*	**£855.00**
TEXTURED GREY	H250 X W450 X D40	50	450	3	*ALTWL-16-503-GY*	**£265.00**
TEXTURED GREY	H540 X W450 X D40	50	900	6	*ALTWL-16-506-GY*	**£407.00**
TEXTURED GREY	H250 X W450 X D40	50	1350	9	*ALTWL-16-509-GY*	**£550.00**
TEXTURED GREY	H1120 X W450 X D40	50	1800	12	*ALTWL-16-512-GY*	**£692.00**
TEXTURED GREY	H1410 X W450 X D40	50	2476	15	*ALTWL-16-515-GY*	**£880.00**
TEXTURED BLACK	H250 X W450 X D40	50	450	3	*ALTWL-16-503-BK*	**£270.00**
TEXTURED BLACK	H540 X W450 X D40	50	900	6	*ALTWL-16-506-BK*	**£415.00**
TEXTURED BLACK	H250 X W450 X D40	50	1350	9	*ALTWL-16-509-BK*	**£560.00**
TEXTURED BLACK	H1120 X W450 X D40	50	1800	12	*ALTWL-16-512-BK*	**£707.00**
TEXTURED BLACK	H1410 X W450 X D40	50	2476	15	*ALTWL-16-515-BK*	**£898.00**
MATT BRONZE	H250 X W450 X D40	50	450	3	*ALTWL-16-503-BZ*	**£283.00**
MATT BRONZE	H540 X W450 X D40	50	900	6	*ALTWL-16-506-BZ*	**£435.00**
MATT BRONZE	H250 X W450 X D40	50	1350	9	*ALTWL-16-509-BZ*	**£587.00**
MATT BRONZE	H1120 X W450 X D40	50	1800	12	*ALTWL-16-512-BZ*	**£740.00**
MATT BRONZE	H1410 X W450 X D40	50	2476	15	*ALTWL-16-515-BZ*	**£940.00**

BENKÉ

Valves

Straight Square Valves (2)

CHROME	*CUBE-STR*	**£24.00**

Angled Square Valves (2)

CHROME	*CUBE-ANG*	**£24.00**

Angled Crosshead Valves (2)

CHROME	*TRAD-CROSS-ANG*	**£45.00**

Straight Round Valves (2)

CHROME	*KART-STR*	**£18.00**
BLACK	*BLACK-STR*	**£39.00**
BRUSHED BRASS	*BRASS-STR*	**£39.00**
ANTHRACITE	*ANTH-STR*	**£39.00**
WHITE	*WHITE-STR*	**£39.00**
TEXTURED GREY	*GREY-STR*	**£39.00**

Angled Round Valves (2)

CHROME	*KART-ANG*	**£18.00**
BLACK	*BLACK-ANG*	**£39.00**
BRUSHED BRASS	*BRASS-ANG*	**£39.00**
ANTHRACITE	*ANTH-ANG*	**£39.00**
WHITE	*WHITE-ANG*	**£39.00**
TEXTURED GREY	*GREY-ANG*	**£39.00**

Corner Round Valves (2)

CHROME	*CRNV*	**£27.00**
BLACK	*CRNV-BLACK*	**£47.00**
BRUSHED BRASS	*CRNV-BRASS*	**£47.00**
ANTHRACITE	*CRNV-ANTH*	**£47.00**
WHITE	*CRNV-WHITE*	**£47.00**
TEXTURED GREY	*CRNV-GREY*	**£47.00**

Electric Elements

	Wattage	Code	
CHROME	150W	*HE150C*	**£63.00**
CHROME	300W	*HE300C*	**£66.00**
CHROME	600W	*HE600C*	**£70.00**
BLACK	150W	*HE150B*	**£63.00**
BLACK	300W	*HE300B*	**£66.00**
BLACK	600W	*HE600B*	**£70.00**
ANTHRACITE	150W	*HE150A*	**£63.00**
ANTHRACITE	300W	*HE300A*	**£66.00**
ANTHRACITE	600W	*HE600A*	**£70.00**

Digital Thermostat Elements

	Wattage	Code	
CHROME	300W	*TE300C*	**£135.00**
CHROME	600W	*TE600C*	**£145.00**
BLACK	300W	*TE300B*	**£135.00**
BLACK	600W	*TE600B*	**£145.00**
ANTHRACITE	300W	*TE300A*	**£135.00**
ANTHRACITE	600W	*TE600A*	**£145.00**

Angled Round TRV Twin Sets

CHROME	*CR-TRV301A*	**£80.00**
BLACK	*BK-TRV301A*	**£80.00**
BRUSHED BRASS	*BR-TRV301A*	**£85.00**
ANTHRACITE	*AN-TRV301A*	**£80.00**
WHITE	*WT-TRV301A*	**£80.00**
TEXTURED GREY	*GY-TRV301A*	**£80.00**

Corner Round TRV Twin Sets

CHROME	*CR-TRV101C*	**£90.00**
BLACK	*BK-TRV101C*	**£90.00**
BRUSHED BRASS	*BR-TRV101C*	**£95.00**
ANTHRACITE	*AN-TRV101C*	**£90.00**
WHITE	*WT-TRV101C*	**£90.00**
TEXTURED GREY	*GY-TRV101C*	**£90.00**

Straight Round TRV Twin Sets

CHROME	*CR-TRV201S*	**£85.00**
BLACK	*BK-TRV201S*	**£85.00**
ANTHRACITE	*AN-TRV201S*	**£85.00**
WHITE	*WT-TRV201S*	**£85.00**
TEXTURED GREY	*GY-TRV201S*	**£85.00**

Straight TRV

CHROME	*TRVRSC*	**£22.00**

Angled TRV

CHROME	*TRVRAC*	**£18.00**

NEW

Air Vent & Plug Sets

CHROME	*690384*	**£16.00**
BLACK	*690358*	**£16.00**
BRUSHED BRASS	*690357*	**£16.00**
ANTHRACITE	*690359*	**£16.00**
WHITE	*690360*	**£16.00**

NEW

Retro-Fit 18mm Pipe Sleeves

		18 x 300mm
CHROME (ALLOY)	*690415*	**£13.00**
BLACK (PVC)	*690413*	**£8.00**
BRUSHED BRASS (ALLOY)	*690416*	**£13.00**
ANTHRACITE (PVC)	*690425*	**£8.00**
WHITE (PVC)	*690424*	**£8.00**

15mm Pipe Sleeves

		15 x 180mm
CHROME	*CR-PIPE01*	**£33.00**
BLACK	*BK-PIPE01*	**£33.00**
BRUSHED BRASS	*BR-PIPE01*	**£36.00**
ANTHRACITE	*AN-PIPE01*	**£33.00**
WHITE	*WT-PIPE01*	**£33.00**

WALLS, CEILINGS & FLOORING

Leaf Stone Effect Tiles

- Waterproof 5mm thick tiles.
- Pre-fitted underlay for comfort and durability.
- Vinyl & Stone-plastic Composite layers to resist UV and wear.
- Easy install Drop Down Click system.

600mm

300mm

11 Tiles (2.05m²) per pack

Jura Carrera Marble

Finish	Code	
MATT	LRSPC-JUCM	£118.00 (£57.56/M²)

Loch Lomond Light Marble

Finish	Code	
MATT	LRSPC-LLLM	£118.00 (£57.56/M²)

Canna Grey Slate

Finish	Code	
MATT	LRSPC-CGS	£118.00 (£57.56/M²)

Mull Grey Concrete

Finish	Code	
MATT	LRSPC-MUGC	£118.00 (£57.56/M²)

Staffa Graphite Concrete

Finish	Code	
MATT	LRSPC-STGC	£118.00 (£57.56/M²)

Grey Black Concrete

Finish	Code	
MATT	LRSPC-GBC	£118.00 (£57.56/M²)

Eriskay Light Stone

NEW

Finish	Code	
MATT	LRSPC-ERLS	£118.00 (£57.56/M²)

Cairngorm Marble

Finish	Code	
MATT	LRSPC-CAMA	£118.00 (£57.56/M²)

Stirling Rustic Stone

Finish	Code	
MATT	LRSPC-STRS	£118.00 (£57.56/M²)

Shetland Black Slate

Finish	Code	
MATT	LRSPC-SHBS	£118.00 (£57.56/M²)

Orkney Oil Black Slate

Finish	Code	
MATT	LRSPC-OOBS	£118.00 (£57.56/M²)

Tiree Black Slate

NEW

Finish	Code	
MATT	LRSPC-TIBS	£118.00 (£57.56/M²)

Leaf Mosaic Tiles

- Waterproof 5mm thick tiles.
- Pre-fitted underlay for comfort and durability.
- Vinyl & Stone-plastic Composite layers to resist UV and wear.
- Easy install Drop Down Click system.

600mm

300mm

11 Tiles (2.05m²) per pack

Portree Mosaic

Finish	Code	
MATT	LRMSPC-PRTRE	£174.00 (£84.87/M²)

Pittenweem Mosaic

Finish	Code	
MATT	LRMSPC-PTNW	£174.00 (£84.87/M²)

Plockton Mosaic

Finish	Code	
MATT	LRMSPC-PLCTN	£174.00 (£84.87/M²)

Cairngorm Marble

Shetland Black Slate

Plockton Mosaic

Forest Wood Planks

- Stunning wood effect flooring planks.
- Feature natural grain and knot effects.
- 12 available finishes.
- Easy installation.
- Drop-down click system.
- Pre-fitted underlay.

1220mm

181mm

10 planks (2.2m²) per pack

Rannoch Elm Wood

Finish	Code	
MATT	*FRSPC-RAEL*	**£125.00** *(£56.82/M²)*

Morlich Oak Wood

Finish	Code	
MATT	*FRSPC-MOOA*	**£125.00** *(£56.82/M²)*

Tummel Oak Wood

Finish	Code	
MATT	*FRSPC-TUOA*	**£125.00** *(£56.82/M²)*

Katrine Oak Wood

Finish	Code	
MATT	*FRSPC-KATOA*	**£125.00** *(£56.82/M²)*

Tarbet Oak Wood

NEW

Finish	Code	
MATT	*FRSPC-TAROA*	**£125.00** *(£56.82/M²)*

Morar Oak Wood

Finish	Code	
MATT	*FRSPC-MOROA*	**£125.00** *(£56.82/M²)*

Long Oak Wood

NEW

Finish	Code	
MATT	*FRSPC-LOOA*	**£125.00** *(£56.82/M²)*

Doon Oak Wood

Finish	Code	
MATT	*FRSPC-DOOA*	**£125.00** *(£56.82/M²)*

Lochy Oak Wood

NEW

Finish	Code	
MATT	*FRSPC-LOCOA*	**£125.00** *(£56.82/M²)*

Lomond Pine Wood

NEW

Finish	Code	
MATT	*FRSPC-LUPI*	**£125.00** *(£56.82/M²)*

Kilconquhar Oak Wood

Finish	Code	
MATT	*FRSPC-KIOA*	**£125.00** *(£56.82/M²)*

Carron Oak Wood

Finish	Code	
MATT	*FRSPC-CAOA*	**£125.00** *(£56.82/M²)*

Forest Herringbone Planks

- Wood effect flooring planks.
- Eye-catching herringbone arrangement.
- Feature natural grain and knot effects.
- Variety of contemporary shades.
- Easy installation.
- Drop-down click system.
- Pre-fitted underlay.

635mm

127mm

22 planks (1.77m²) per pack

Leven Oak Herringbone

Finish	Code	
MATT	*FRHSPC- LEVOAK*	**£162.00** *(£91.53/M²)*

Faolinn Oak Herringbone

Finish	Code	
MATT	*FRHSPC-FAOAK*	**£162.00** *(£91.53/M²)*

Tarbet Oak Herringbone

Finish	Code	
MATT	*FRHSPC-TAROAK*	**£162.00** *(£91.53/M²)*

Carron Oak Herringbone

Finish	Code	
MATT	*FRHSPC-CAROAK*	**£162.00** *(£91.53/M²)*

Morlich Oak Herringbone

Finish	Code	
MATT	*FRHSPC-MOROAK*	**£162.00** *(£91.53/M²)*

Rannoch Elm Wood

Tarbet Oak Herringbone

Ceiling PVC Panels

- Sleek and stylish PVC panels.
- 8mm thick.
- 250mm wide (packs of 4).
- Available in 2.7m or 4m lengths.
- Quick and easy to install.

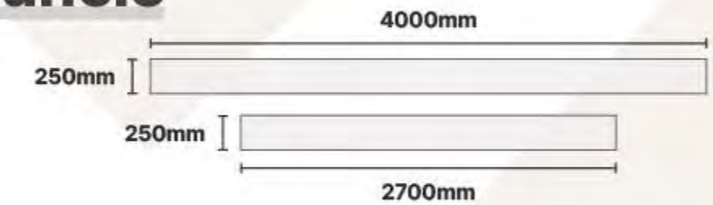

Matt White 2 White Strips

2700MM (4 PACK)	FFC8-27WSWM	£118.00
4000MM (4 PACK)	FFC8-4WSWM	£173.00

Matt White

2700MM (4 PACK)	FF8-27WHM	£118.00
4000MM (4 PACK)	FF8-4WHM	£173.00

Gloss White 2 Chrome Strips

2700MM (4 PACK)	FFC8-27TSS	£118.00
4000MM (4 PACK)	FFC8-4TSS	£173.00

Gloss White 1 Chrome Strip

2700MM (4 PACK)	FFC8-27OSS	£118.00
4000MM (4 PACK)	FFC8-4OSS	£173.00

Gloss White

2700MM (4 PACK)	FF8-27WHG	£118.00
4000MM (4 PACK)	FF8-4WHG	£173.00

Matt White Ash

2700MM (4 PACK)	FF8-WAM	£118.00
4000MM (4 PACK)	FF8-4WAM	£173.00

Gloss White 2 Chrome Strips

Gloss White 1 Chrome Strip

Matt White Ash

Gloss White

Wetwall PVC Panels

- Sleek & stylish PVC panels.
- 10mm thickness.
- Variety of beautiful finishes.
- Tongue & groove.
- Easy installation.

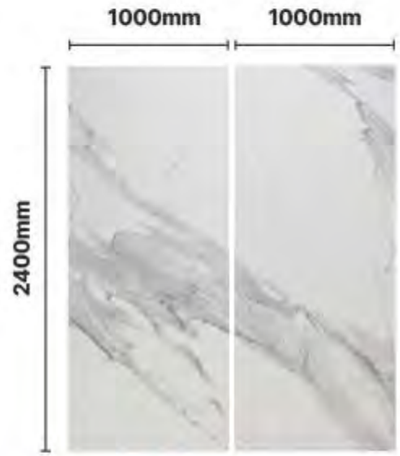

2 Panel Set Creates Continuous Pattern

NEW

White Cart Marble

	Code	
MATT (PACK OF 2)	FFP10-WCM	£276.00

Wetwall PVC Panels

2400mm

1000mm

NEW

White Super Matt

Finish	Code	
SUPER MATT	*PWPWHSM100*	**£138.00**

NEW

Roma Marble

Finish	Code	
GLOSS	*PWPROMA100*	**£138.00**

NEW

Carrera Bronze Marble

Finish	Code	
SUPER MATT	*PWPCABM100*	**£138.00**

NEW

Terazzo Stone

Finish	Code	
MATT	*PWPTEST100*	**£138.00**

NEW

Valencia Stone

Finish	Code	
MATT	*PWPVAST100*	**£138.00**

NEW

Light Grey Natural Stone

Finish	Code	
MATT	*PWPLGNS100*	**£138.00**

NEW

Dark Grey Natural Stone

Finish	Code	
MATT	*PWPDGNS100*	**£138.00**

Light Grey
Natural Stone

Carrera Bronze
Marble

Terazzo Stone

Valencia Stone

Dark Grey
Natural Stone

Wetwall PVC Panels

White Gloss

Finish	Code	
GLOSS	*PWPWHGL100*	**£138.00**

White Arctic Sparkle

Finish	Code	
GLOSS	*PWPWHAS100*	**£138.00**

White Pearl

Finish	Code	
GLOSS	*PWPWHPE100*	**£145.00**

Beige Slate

Finish	Code	
MATT	*PWPBESL100*	**£138.00**

Grey Stone

Finish	Code	
GLOSS	*PWPGRST100*	**£138.00**

White Concrete

Finish	Code	
MATT	*PWPWHCO100*	**£138.00**

Silver Vision

Finish	Code	
MATT	*PWPSIVI100*	**£138.00**

White Stone

Finish	Code	
MATT	*PWPWHST100*	**£138.00**

Grey/Black Concrete

Finish	Code	
MATT	*PWPGRCO100*	**£138.00**

Silver Pearl

Finish	Code	
GLOSS	*PWPSIPE100*	**£145.00**

White Selenite

Finish	Code	
MATT	*PWPWHSE100*	**£138.00**

Grey Retro Metallic

Finish	Code	
MATT	*PWPGRRM100*	**£138.00**

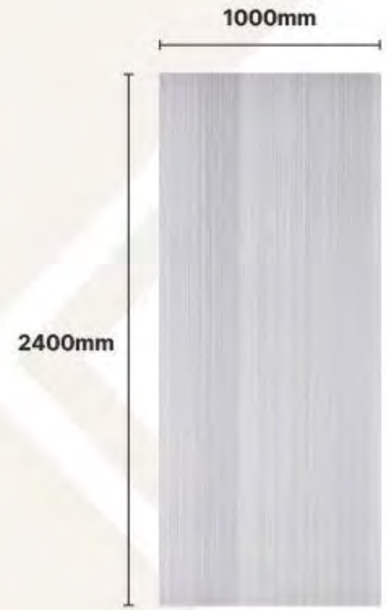

White Stone

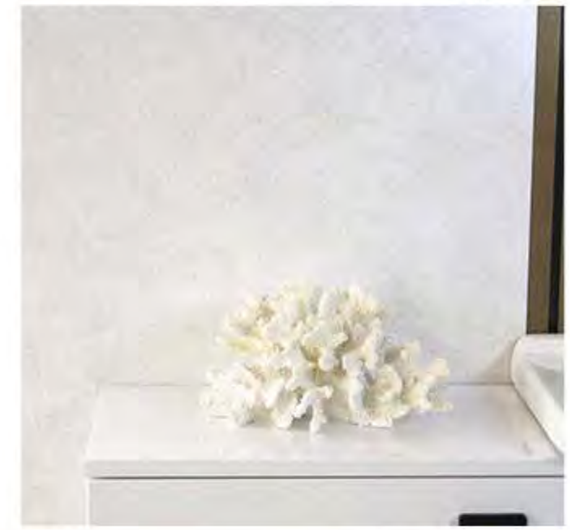

Grey Black Concrete (Matt)

Wetwall PVC Panels

Light Grey Marble

Finish	Code	
GLOSS	*PWPLGRM100*	**£145.00**

White Marble

Finish	Code	
GLOSS	*PWPWHMA100*	**£145.00**

Timeless Carrera Gloss

NEW

Finish	Code	
GLOSS	*PWPTICG100*	**£138.00**

Timeless Carrera Matt

Finish	Code	
MATT	*PWPTICA100*	**£138.00**

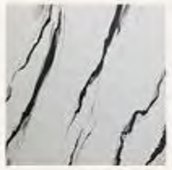

Monza

Finish	Code	
MATT	*PWPMONZ100*	**£138.00**

Florence Marble

Finish	Code	
MATT	*PWPFLOR100*	**£138.00**

Grey Marble

Finish	Code	
GLOSS	*PWPGRMA100*	**£138.00**

Beige Concrete

Finish	Code	
MATT	*PWPBECO100*	**£138.00**

Grey Quartz Light

Finish	Code	
MATT	*PWPGRQL100*	**£138.00**

Ocean Marble

Finish	Code	
GLOSS	*PWPOCMA100*	**£138.00**

Milazzo

Finish	Code	
GLOSS	*PWPMILA100*	**£138.00**

Grey Onyx

Finish	Code	
GLOSS	*PWPGRON100*	**£138.00**

Graphite Quartz

Finish	Code	
MATT	*PWPGRQU100*	**£138.00**

Solerno

Finish	Code	
GLOSS	*PWPSOLE100*	**£138.00**

Timeless Carrera (Matt)

Solerno

Grey Onyx

Florence Marble

Wetwall PVC Tile Effect Panels

- Sleek & stylish PVC panels.
- 10mm thickness.
- Variety of beautiful finishes.
- Tongue & groove.
- Easy installation.

Tile Size
600 × 300mm

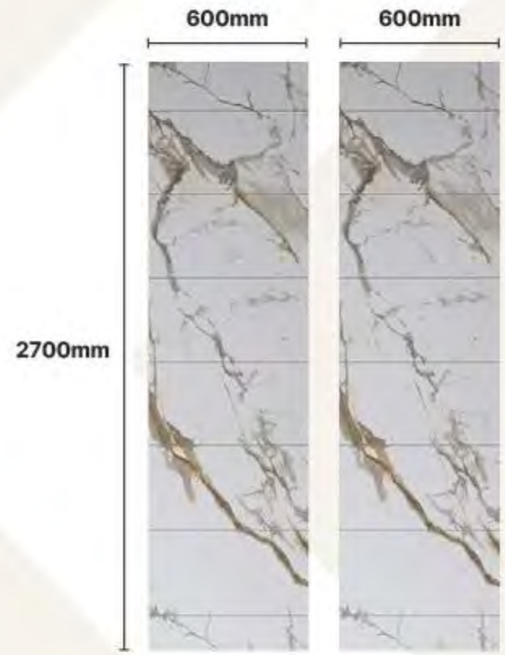

Pack of 2 (2 × 600mm)

NEW

Laruinn Tile Line

Finish	Code	
MATT	*FFTL-LRUIN*	**£174.00**

NEW

Vrackie Tile Line

Finish	Code	
MATT	*FFTL-VRKI*	**£174.00**

NEW

Vuirich Tile Line

Finish	Code	
MATT	*FFTL-VRCH*	**£174.00**

NEW

Innse Tile Line

Finish	Code	
MATT	*FFTL-INNSE*	**£174.00**

NEW

Fara Tile Line

Finish	Code	
MATT	*FFTL-FARA*	**£174.00**

NEW

Tirran Tile Line

Finish	Code	
MATT	*FFTL-TIRN*	**£174.00**

NEW

Dorain Tile Line

Finish	Code	
MATT	*FFTL-DORA*	**£174.00**

NEW

Odhar Tile Line

Finish	Code	
MATT	*FFTL-ODR*	**£174.00**

NEW

Morven Tile Line

Finish	Code	
MATT	*FFTL-MRVN*	**£174.00**

Fara
Tile Line

Vrackie
Tile Line

Perform Tile Effect

Stylish tile effect plywood wall panels in choice of 4 sizes to compliment every shape, size and style of bathroom.

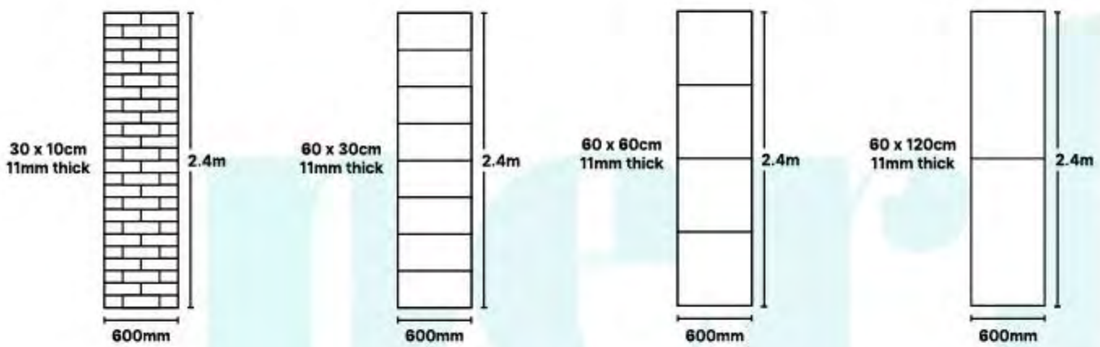

Snow White Gloss

Santorini Marble Satin

Snow White Gloss

60 X 600MM TILE	*TESWG60*	**£219.00**

Snow White Satin

60 X 600MM TILE	*TESWS60*	**£219.00**

White Marble Gloss

60 X 600MM TILE	*TEWMG60*	**£219.00**
60 X 1200MM TILE	*TEWMG62*	**£219.00**

White Marble Satin

60 X 600MM TILE	*TEWMS60*	**£219.00**
60 X 1200MM TILE	*TEWMS12*	**£219.00**

White Metro Brick Gloss

30 X 100MM TILE	*TEWMG31*	**£219.00**

White Metro Brick Satin

30 X 100MM TILE	*TEWMS31*	**£219.00**

Sandstone Brushed

60 X 600MM TILE	*TESSB60*	**£219.00**

Santorini Marble Satin

60 X 600MM TILE	*TESMS60*	**£219.00**

White Marble Satin

Perform Tile Effect

Light Slate Satin

Natural Slate Brushed

Stromboli Marble Gloss

Cement Satin

Black Velvet Satin

Brooklyn Concrete Brushed

Concrete Satin

60 X 600MM TILE	*TECOS60*	**£219.00**

Brooklyn Concrete Brushed

60 X 600MM TILE	*TEBCB60*	**£219.00**

Cement Satin

60 X 300MM TILE	*TECES30*	**£219.00**
60 X 600MM TILE	*TECES60*	**£219.00**

Light Slate Satin

60 X 300MM TILE	*TELSS30*	**£219.00**
60 X 600MM TILE	*TELSS60*	**£219.00**

Light Slate Gloss

60 X 300MM TILE	*TELSG60*	**£219.00**
60 X 1200MM TILE	*TELSG12*	**£219.00**

Natural Slate Brushed

60 X 600MM TILE	*TENSB60*	**£219.00**

Natural Slate Gloss

60 X 300MM TILE	*TENSG60*	**£219.00**
60 X 1200MM TILE	*TENSG12*	**£219.00**

Stromboli Marble Gloss

60 X 600MM TILE	*TESMG60*	**£219.00**
60 X 1200MM TILE	*TESMG12*	**£219.00**

Black Velvet Satin

60 X 300MM TILE	*TEBVS30*	**£219.00**
60 X 600MM TILE	*TEBVS60*	**£219.00**

Perform Wall Panels

- Sleek & stylish Marine Plywood panels.
- 11mm thickness.
- Variety of beautiful finishes.
- Tongue & groove.
- Easy installation.

11mm Tongue & Groove

Origins White Gloss

Finish	Code	
GLOSS	*NUWHIGLO12TG*	**£344.00**

Origins Snowflake Sparkle

Finish	Code	
GLOSS	*NUSNOSPA12TG*	**£344.00**

Origins Blue Eiger

Finish	Code	
GLOSS	*NUBLUEIG12TG*	**£344.00**

Origins White Frost

Finish	Code	
GLOSS	*NUWHIFRO12TG*	**£344.00**

Origins White Bonito

Finish	Code	
GLOSS	*NUWHIBON12TG*	**£344.00**

Origins Arctic Shimmer

Finish	Code	
GLOSS	*NUARCSHI12TG*	**£344.00**

Origins Cloudy Marble

Finish	Code	
GLOSS	*NUCLOMAR12TG*	**£344.00**

Origins Stratus Marble

Finish	Code	
GLOSS	*NUSTRMAR12TG*	**£344.00**

Origins Grey Bonito

Finish	Code	
GLOSS	*NUGREBON12TG*	**£344.00**

Origins Black Bonito

Finish	Code	
GLOSS	*NUBLABON12TG*	**£344.00**

Origins
Cloudy Marble

Origins
Oyster Marble

Origins Stratus Marble

Origins Toffee Marble

Origins Toffee Marble

Finish	Code	
GLOSS	*NUTOFMAR12TG*	**£344.00**

Origins Oyster Marble

Finish	Code	
GLOSS	*NUOYSMAR12TG*	**£344.00**

Perform Wall Panels (cont.)

Harmony Dandy Wood

Finish	Code	
MATT	*NUDANWOO12TG*	**£386.00**

Harmony Concrete

Finish	Code	
MATT	*NUCONCRE12TG*	**£386.00**

Harmony Clear Splendour

Finish	Code	
MATT	*NUCLESPL12TG*	**£386.00**

Harmony Verde Marble

Finish	Code	
MATT	*NUVERMAR12TG*	**£386.00**

Harmony Roffel Marble

Finish	Code	
MATT	*NUROFMAR12TG*	**£386.00**

Elegance Quartz

Finish	Code	
MATT	*NUQUARTZ12TG*	**£452.00**

Elegance Statuario Marble

Finish	Code	
MATT	*NUSTAMAR12TG*	**£452.00**

Elegance Lima

Finish	Code	
MATT	*NULIMA12TG*	**£452.00**

Harmony
Verde Marble

Harmony
Roffel Marble

Perform Woodgrain Panels

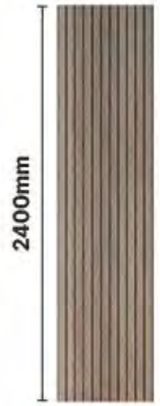

11mm Tongue & Groove

Woodgrain
Sunset Boulevard

Woodgrain
Champs Elysees

Woodgrain
La Rambla

NEW

Woodgrain Champs Elysees

Finish	Code	
MATT	*TECWE35*	**£228.00**

NEW

Woodgrain La Rambla

Finish	Code	
MATT	*TELAWE35*	**£228.00**

NEW

Woodgrain Ku Damm

Finish	Code	
MATT	*TEDMWE35*	**£228.00**

NEW

Woodgrain Sunset Boulevard

Finish	Code	
MATT	*TESUWE35*	**£228.00**

NEW

Woodgrain Broadway

Finish	Code	
MATT	*TEBRWE35*	**£228.00**

BENKÉ

Benke Wall Boards

- Sleek & stylish Waterproof Plywood panels.
- 10mm thickness.
- Variety of beautiful finishes.
- Tongue & groove.
- Easy installation.

Campsie Carrara

11mm Tongue & Groove

St Andrews Sand

Galloway Gold

Ben Nevis White

Finish	Code	
GLOSS	*BBBEN12TG*	**£324.00**

Campsie Carrara

Finish	Code	
GLOSS	*BBCAM12TG*	**£324.00**

Etive Calacatta

Finish	Code	
GLOSS	*BBETC12TG*	**£324.00**

St Andrews Sand

Finish	Code	
GLOSS	*BBSAS12TG*	**£324.00**

Galloway Gold

Finish	Code	
SATIN	*BBGAG12TG*	**£324.00**

Etive Calacatta

Highland Frost

Finish	Code	
GLOSS	*BBHIF12TG*	**£324.00**

Stornoway Sparkle

Finish	Code	
GLOSS	*BBSTS12TG*	**£324.00**

Grampian Grey Slate

Finish	Code	
GLOSS	*BBGGS12TG*	**£324.00**

Skye Slate

Finish	Code	
GLOSS	*BBSKS12TG*	**£324.00**

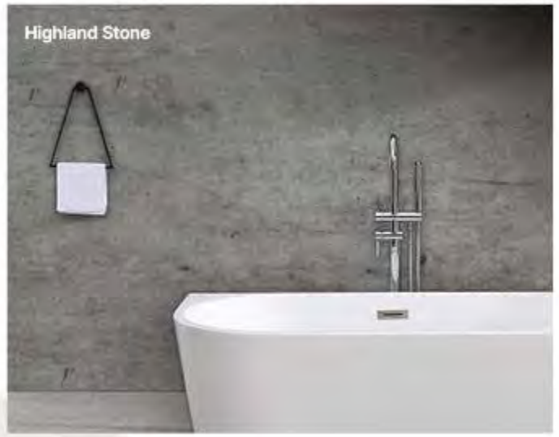

Highland Stone

Finish	Code	
MATT	*BBHIS12TG*	**£324.0 0**

Moray Mist

Finish	Code	
GLOSS	*BBMOM12TG*	**£324.00**

Cairngorm Granite

Finish	Code	
MATT	*BBCAG12TG*	**£324.00**

Selkirk Slate

Finish	Code	
MATT	*BBSES12TG*	**£324.00**

ABS Trims

End Caps

CHROME	*FFT10-EUC*	**£17.00**
BLACK	*FFT10-EUB*	**£21.00**
WHITE	*FFT10-EUW*	**£21.00**
BRUSHED BRASS	*FFT10-EUBB*	**£23.00**

Internal Winged Corner

CHROME	*FFT10-ICC*	**£17.00**
BLACK	*FFT10-ICB*	**£21.00**
WHITE	*FF10-ICW*	**£21.00**

Internal Quad Corner

CHROME	*FFT-QUACP*	**£17.00**
BLACK	*FFT-QUABL*	**£21.00**
BRUSHED BRASS	*FFT-QUABB*	**£23.00**
WHITE	*FFT-QUAW*	**£21.00**

External Corner

CHROME 25MM	*FFT-ANGCP*	**£17.00**
BLACK 25MM	*FFT-ANGBL*	**£21.00**
WHITE 25MM	*FFT-ANGWH*	**£21.00**
BRUSHED BRASS 25MM	*FFT-ANGBB*	**£23.00**

External Winged Corner

CHROME	*FFT10-ECC*	**£17.00**
BLACK	*FFT10-ECB*	**£21.00**
WHITE	*FFT10-ECW*	**£21.00**

H Joint

CHROME	*FFT10-HJC*	**£21.00**

5 YEAR GUARANTEE

Chrome

Black

White

Brushed Brass

New Option Available

Brushed Brass ABS

Aluminium Trims

5 YEAR GUARANTEE

Chrome

Black

White

Satin

Brushed Brass

End Caps Aluminium 11mm

CHROME	*FFT10-EUCM*	**£22.00**
BLACK	*FFT10-EUBM*	**£17.00**
BRUSHED BRASS	*FFT10-EUBBM*	**£29.00**
SATIN	*FFT10-EUSMM*	**£17.00**
WHITE	*FFT10-EUWM*	**£17.00**

Internal Winged Corner Aluminium 11mm

CHROME	*FFT10-ICCM*	**£34.00**
BLACK	*FFT10-ICBM*	**£22.00**
BRUSHED BRASS	*FFT10-ICBBM*	**£39.00**
SATIN	*FFT10-ICSMM*	**£22.00**
WHITE	*FFT10-ICWM*	**£22.00**

External Corner

CHROME 20MM	*FFT-ANG20CM*	**£27.00**
BLACK 20MM	*FFT-ANG20BM*	**£31.00**
WHITE 20MM	*FFT-ANG20WM*	**£33.00**
BRUSHED BRASS 20MM	*FFT-ANG20BBM*	**£31.00**
SATIN 20MM	*FFT-ANG20SMM*	**£37.00**

External Winged Corner Aluminium 11mm

CHROME	*FFT10-ECCM*	**£36.00**
BLACK	*FFT10-ECBM*	**£22.00**
BRUSHED BRASS	*FFT10-ECBBM*	**£39.00**
SATIN	*FFT10-ECSMM*	**£22.00**
WHITE	*FFT10-ECWM*	**£22.00**

H Joint Aluminium 11mm

CHROME	*FFT10-HJCM*	**£35.00**
BLACK	*NUBLKSTRJOINT*	**£22.00**
BRUSHED BRASS	*NUBBSTRJOINT*	**£39.00**
SATIN	*NUSAASTRJOINT*	**£22.00**
WHITE	*NUWHTSTRJOINT*	**£22.00**

Niche

NEW

Niche Square Wetwall Inset

- Stylish inset box shelving units
- Available in 3 finishes

		W300 x H300 x D95mm
STAINLESS STEEL	*KBNIC01*	**£123.00**
BLACK	*KBNIC02*	**£127.00**
BRUSHED BRASS	*KBNIC03*	**£154.00**

NEW

Niche Small Rectangle Wetwall Inset

- Stylish inset box shelving units
- Available in 3 finishes
- Landscape or portrait

		W300 x H450 x D95mm
STAINLESS STEEL	*KBNIC13*	**£130.00**
BLACK	*KBNIC14*	**£140.00**
BRUSHED BRASS	*KBNIC15*	**£163.00**

NEW

Niche Rectangle Wetwall Inset with Shelf

- Stylish inset box shelving units
- Available in 3 finishes

		W600 x H300 x D95mm
STAINLESS STEEL	*KBNIC09*	**£165.00**
BLACK	*KBNIC10*	**£180.00**
BRUSHED BRASS	*KBNIC11*	**£195.00**

NEW

Niche Rectangle Wetwall Inset

- Stylish inset box shelving units
- Available in 3 finishes
- Landscape or portrait

		W600 x H300 x D95mm
STAINLESS STEEL	*KBNIC04*	**£135.00**
BLACK	*KBNIC05*	**£158.00**
BRUSHED BRASS	*KBNIC06*	**£175.00**

Square Wetwall Inset
300 x 300mm
Stainless Steel

Rectangle Wetwall Inset
600 x 300mm
Brushed Brass

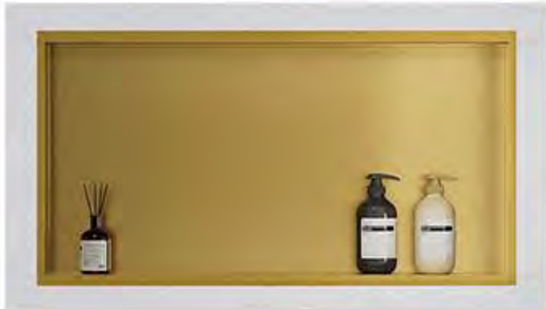

Square Wetwall Inset
300 x 300mm
Brushed Brass

Rectangle Wetwall Inset
600 x 300mm
Black

Sanitaryware

Cameo (Page 132)

Close Coupled

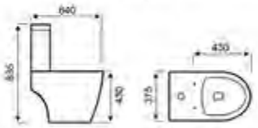

Close to Wall

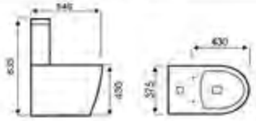

Comfort Height

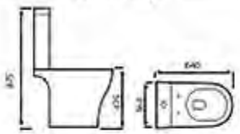

Back to Wall

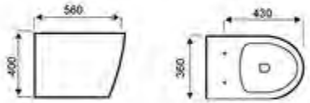

Pedestal

450/500/550mm Basins

Wall Mounted

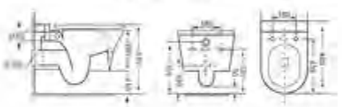

Semi Recess Basin

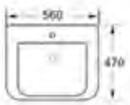

Wave Round (Page 120)

Close Coupled

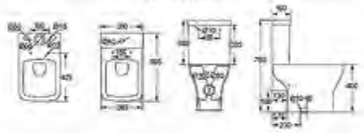

Close to Wall

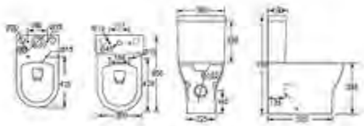

Comfort Height

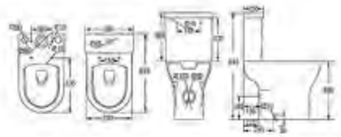

Back to Wall

Wave Square (Page122)

Close Coupled

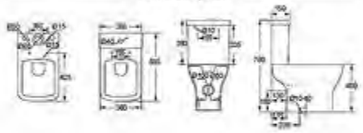

Close to Wall

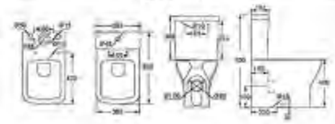

Comfort Height

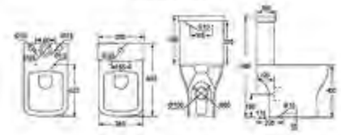

Back to Wall

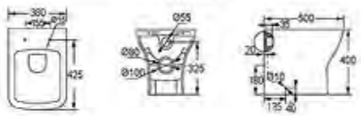

Genoa Round (Page 128)

Close to Wall

Comfort Height

Back to Wall

Wall Mounted

Genoa Square (Page 130)

Close Coupled

Close to Wall

Back to Wall

Wall Mounted

Coral (Page 124)

Close Coupled

Close to Wall

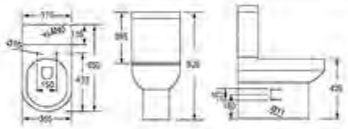

Comfort Height

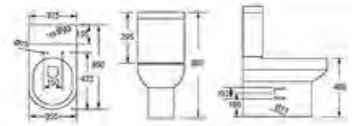

Comfort Height Close to Wall

Back to Wall

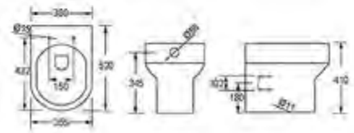

Comfort Height Back to Wall

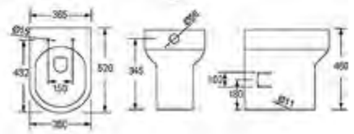

Wall Mounted

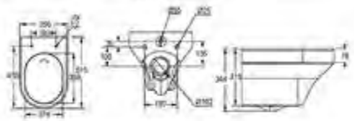

450/500/550mm Basins

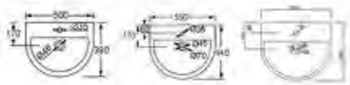

Semi Recess Basin

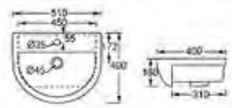

Modena Concealed Cistern (Page134)

MODCIST820 (820mm)

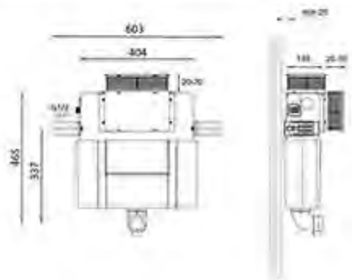

MODCIST980 (980mm)

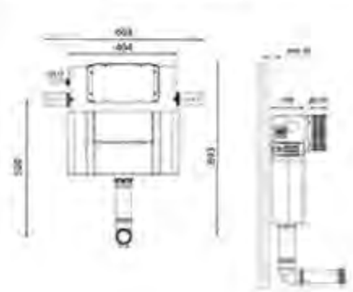

MODCIST1180 (1180mm)

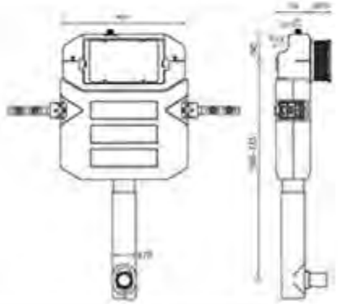

Modena Wall Frames (Page 134)

MODFR820 (820mm)

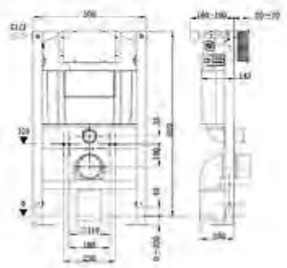

MODFR980 (980mm)

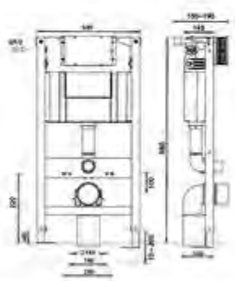

MODFR1180 (1180mm)

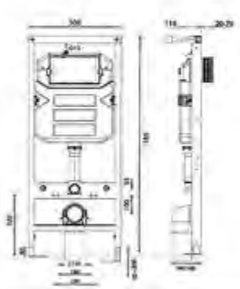

Baths

Haddington Page 168

1500 × 750

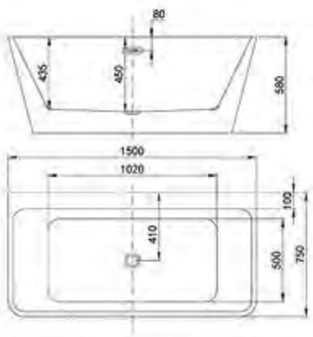

1700 × 750

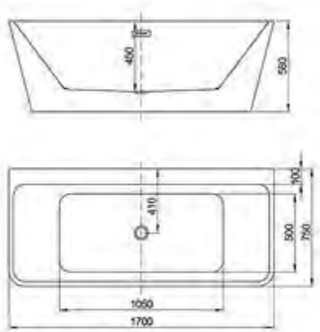

Marine Page 174

1500 × 750 L/H

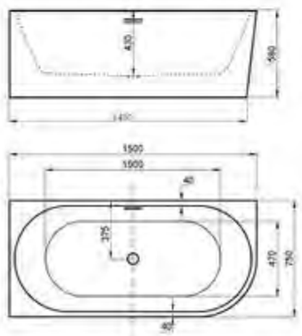

1700 × 800 L/H

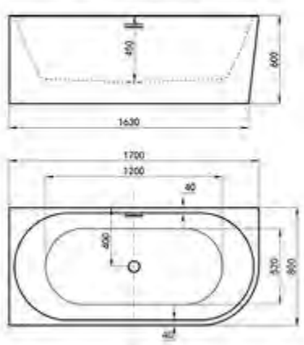

Dunbar Page 172

1500 × 730

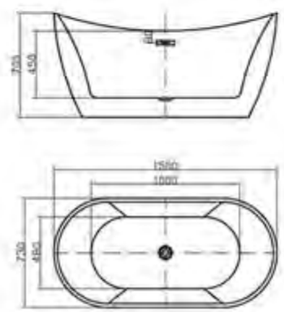

1700 × 800

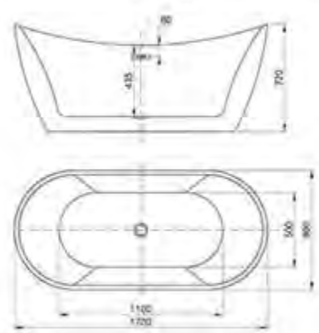

Muirfield Page 169

1700 × 800

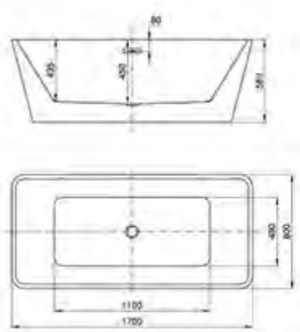

Surf Baths Page 182

1700 × 700 SE

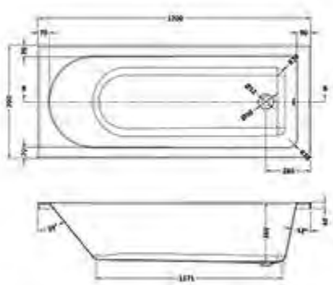

1700 × 700 DE

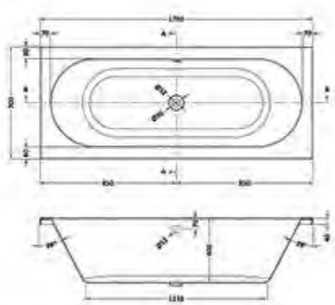

Fidra Page 170

1500 × 750

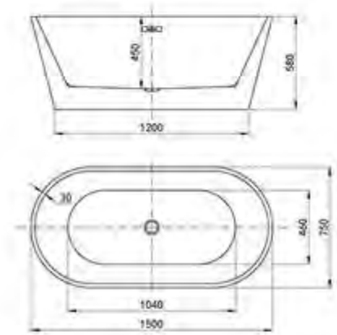

1600 × 750 L/H

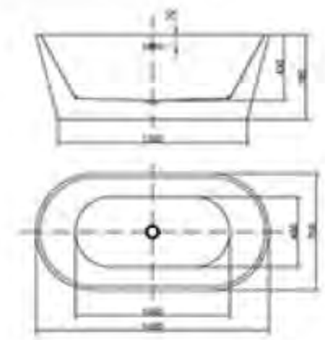

1700 × 800

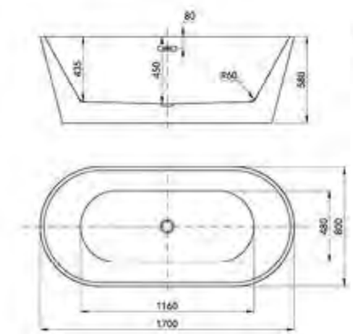

Tantallon Page 173

1500 × 750

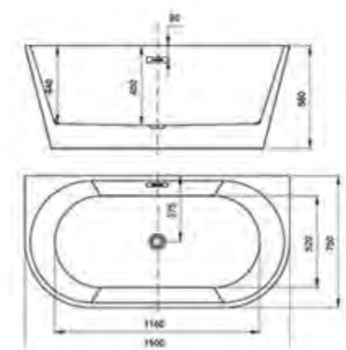

1700 × 800 L/H

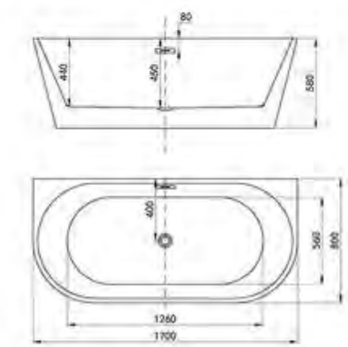

Gullane Page 171

1700 × 800

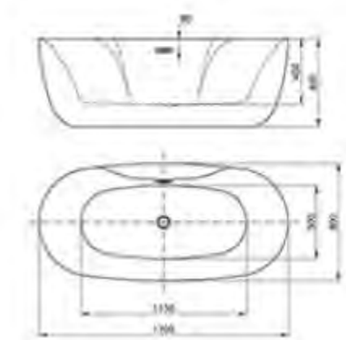

Flow Baths Page 182

1700 × 700 SE

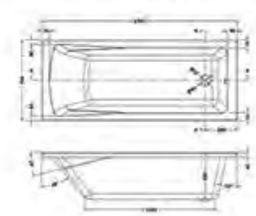

1700 × 700 DE

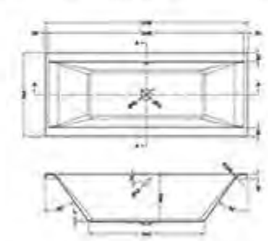

1700 × 750 SE

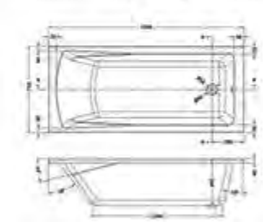

1700 × 750 DE

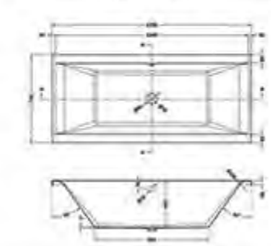

Cast Marble & Solid Surface Baths

Cusco 180

1550 × 750

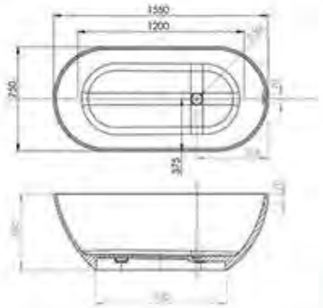

1600 × 700

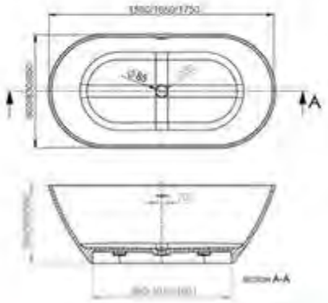

1780 × 850

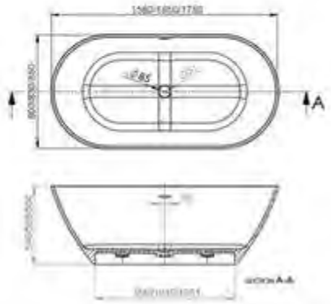

Cusco 180

1640 × 830

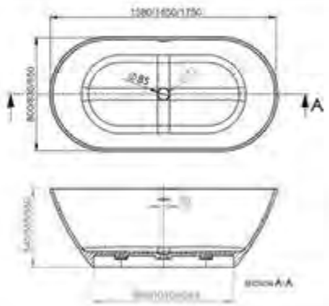

1600 × 800

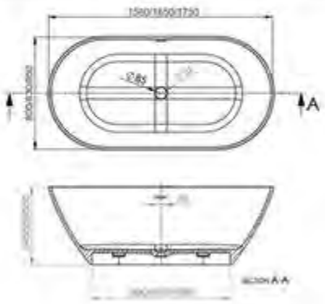

U2 Page 178

1650 × 850

Havana 177

BTW 1650 × 845

Corner Left 1700 × 800

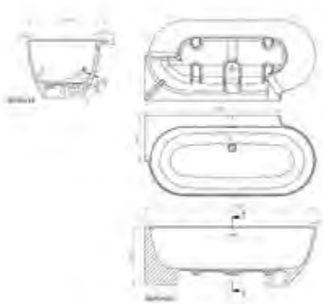

Corner Right 1700 × 800

New Nirvana Page 178

1700 × 960

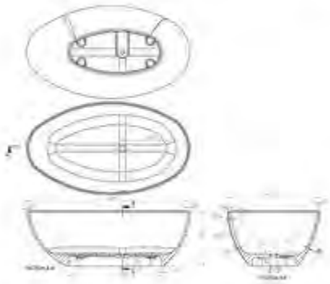

Oasis Page 179

1800 × 850

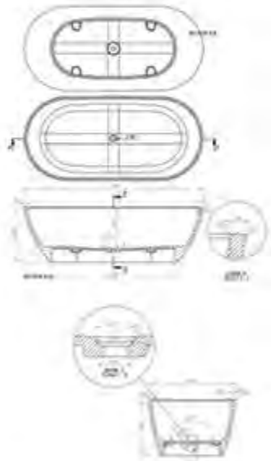

Rio Page 179

1790 × 800

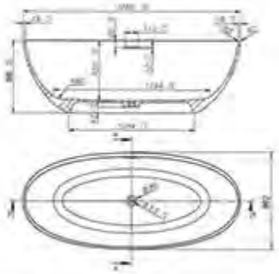

Ica Page 181

1700 × 800

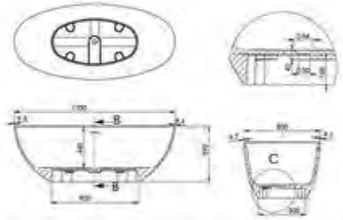

iconiq bathrooms

Solo Page 176

1350 × 740

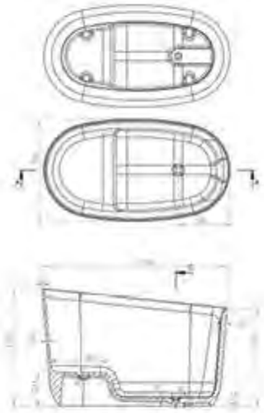

Shower Trays

Naturals Stone Effect Shower Trays Page 194-196

Size (mm)	A	B	C	D
1000 X 700	1000	700	350	350
1000 X 800	1000	800	350	400
1000 X 900	1000	900	350	450
1200 X 700	1200	700	450	350
1200 X 800	1200	800	450	400
1200 X 900	1200	900	450	450
1400 X 700	1400	700	450	350
1400 X 800	1400	800	450	400
1400 X 900	1400	900	450	450
1500 X 700	1500	700	450	350
1500 X 800	1500	800	450	400
1500 X 900	1500	900	450	450
1600 X 700	1600	700	550	350
1600 X 800	1600	800	550	400
1600 X 900	1600	900	550	450
1700 X 700	1700	700	550	350
1700 X 800	1700	800	550	400
1700 X 900	1700	900	550	450

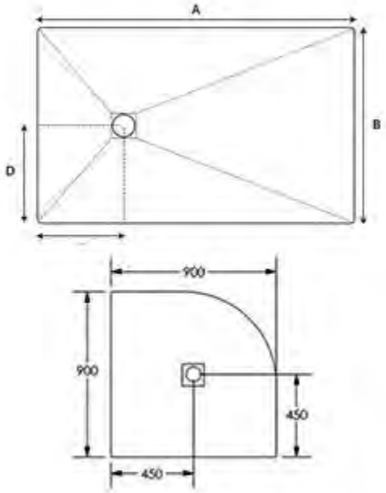

Shower Trays

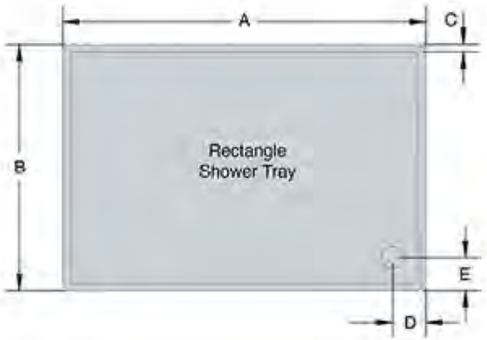

Rectangle (45mm) Page 198

Size (mm)	A	B	C	D	E
900 X 700	900	700	52	135	135
900 X 760	900	760	52	135	135
900 X 800	900	800	52	135	135
1000 X 700	1000	700	52	135	135
1000 X 760	1000	760	52	135	135
1000 X 800	1000	800	52	135	135
1000 X 900	1000	900	52	135	135
1100 X 760	1100	760	52	135	135
1100 X 800	1100	800	52	135	135
1100 X 900	1100	900	52	135	135
1200 X 700	1200	700	52	135	135
1200 X 760	1200	760	52	135	135
1200 X 800	1200	800	52	135	135
1200 X 900	1200	900	52	135	135
1300 X 800	1300	800	52	135	135
1400 X 700	1400	700	52	135	135
1400 X 800	1400	800	52	135	135
1400 X 900	1400	900	52	135	135
1500 X 700	1500	700	52	135	135
1500 X 760	1500	760	52	135	135
1500 X 800	1500	800	52	135	135
1500 X 900	1500	900	52	135	135
1600 X 700	1600	700	52	135	135
1600 X 760	1600	760	52	135	135
1600 X 800	1600	800	52	135	135
1600 X 900	1600	900	52	135	135
1700 X 700	1700	700	52	135	135
1700 X 760	1700	760	52	135	135
1700 X 800	1700	800	52	135	135
1700 X 900	1700	900	52	135	135
1800 X 800	1800	800	52	135	135

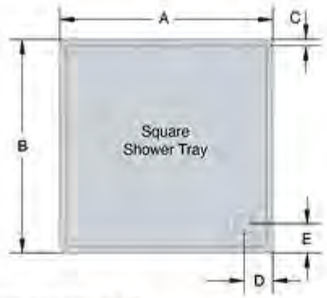

Square (45mm) Page 197

Size (mm)	A	B	C	D	E
700 X 700	700	700	52	135	135
760 X 760	760	760	52	135	135
800 X 800	800	800	52	135	135
900 X 900	900	900	52	135	135
1000 X 1000	1000	1000	52	135	135

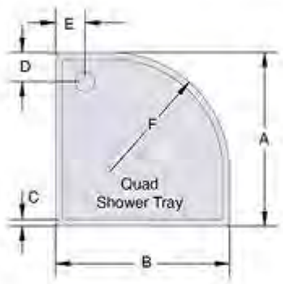

Quadrant (45mm) Page 197

Size (mm)	A	B	C	D	E	F
800 X 800	800	800	52	135	135	550
900 X 900	900	900	52	135	135	550
1000 X 1000	1000	1000	52	135	135	550

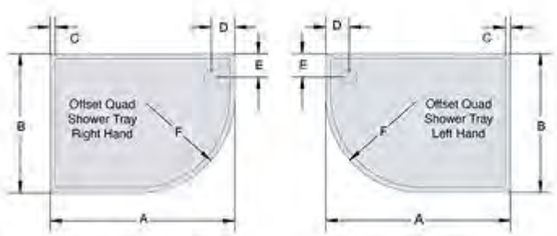

Offset Quadrant (45mm) Page 197

Size (mm)	A	B	C	D	E	F
900 X 760	900	760	52	135	135	550
1000 X 800	1000	800	52	135	135	550
1200 X 800	1200	800	52	135	135	550
1200 X 900	1200	900	52	135	135	550

Notes

Take a note of products you like,
with space to plan your room.

Alloa
The Whins
Whins Road
Alloa FK10 3TA

01259 219 555

alloa@beatsons.co.uk

Cumbernauld
Glencryan Road
Carbrain
Cumbernauld G67 2UQ

01236 722 580

cumbernauld@beatsons.co.uk

Dunfermline
Units 1 and 2
Pitreavie Cresent
Pitreavie Industrial Estate
Dunfermline KY11 8UT

01383 741 980

dunfermline@beatsons.co.uk

Penicuik
Eastfield Drive
Eastfield Industrial Estate
Penicuik EH26 8BA

01968 670 061

penicuik@beatsons.co.uk

Stirling
Craigleith Road
Broadleys Business Park
Stirling FK7 7BA

01786 450 969

stirling@beatsons.co.uk

BEATSON'S
BUILDING SUPPLIES

www.beatsons.co.uk

BEATSON'S

BATHROOM COLLECTION AUG 2025